MAffS
Valves & Fittings

Tube Fittings

VOCAL FOR LOCAL

MAKE IN INDIA

AATMA-NIRBHAR BHARAT

MAFFS VALVES & FITTINGS PVT LTD

Manufacturer of Industrial Valves, Instrumentation Valves & Fittings

www.maffsvalves.com

OUR FOCUS

ABOUT US

In continuation to our legacy journey as a customer centric company **"Expert Engineering"** which started in 2001, we are now delighted to expand our business portfolio to Industrial and Instrumentation Valves & fittings under the name of **"Maffs Valves & Fittings Private Limited".**

Maffs Valves & Fittings is an Indian based Valve Manufacturing & Service company for the process, power and energy industries across the globe.

We have state of the art manufacturing facility to produce high quality valves and fittings to meet specific needs of the customers. This modern facility is supported by a specialized team of highly skilled staff who ensures of the quality and customer needs are met by complying to International standards.

We are involved in the Design, Manufacturing, Testing, Servicing and Supply of Industrial Valves and Instrumentation Valves & Fittings. We work with the highest consideration for the health & safety of our people and minimize the environmental risk.

Maffs Valves & Fittings is accredited and complies with the Quality Management System ISO 9001:2015.

Commitment

Quality

Safety

Customer Delight

VALUES

Integrity I Commitment I Customer Focus
Building Relationships I Teamwork.

MISSION

Our mission is to provide specialized products & services to our clients with delivery commitments to achieve customer delight.

VISION

Be a global leader in providing specialized products and services in flow control business with commitment in providing the best possible quality, cost & delivery.

CODE OF CONDUCT

The Code of Conduct outlines Maffs commitments and requirements regarding business practices and personal conduct.

QUALITY POLICY

Our policy is to continuously improve customer satisfaction by supplying high quality products as committed in compliance with the requirements of our Quality Management System.

Our objectives are :

- Improve customer satisfaction.
- Reduce customer complaints.
- Improve on-time delivery.
- Improve delivery lead times.
- Successful completion of audits.

TUBE FITTINGS

Connector
- Male connector
- O ring Male connector
- Female connector
- Bulkhead female connector
- Bulkhead male connector
- Port Connector
- Reducing Port Connector
- Male Weld Connector

Elbow :
- Union Elbow
- Swivel Elbow
- Bulkhead elbow
- Male Elbow
- 45 deg. Male Elbow
- Positionable Male Elbow
- Female Elbow
- Tube weld Elbow

Tee :
- Union Tee
- Male run tee
- Positionable Male run tee
- Positionable branch tee
- Female run tee
- Female Branch tee
- Reducing union tee
- Male Branch tee

Union :
- Union
- Reducing union
- Bulkhead Union
- Union Cross

Adapter :
- Male adapter
- Female adapter
- O ring Male adapter

Others :
- Front Ferrule
- Back Ferrule
- Coupling Cap
- Fitting end closure
- Tube Cap
- Tube Plug
- Reducer
- Bulk head reducer

Tube Fittings

MAFFS tube fittings are designed for various process, power, and instrument applications. They are designed to provide leak-free connections and are manufactured to the best standards of quality and precision. They are available in almost all sizes, materials, and configurations as per customer requirements or industry requirements.

All our fittings are traceable with the heat code and serial nos to provide you with complete details. All tube fittings work on seamless and welded tubings.

Typical material includes SS316, SS304, SS316L, SS304L, Monel, Hastalloy, Brass, Carbon Steel, etc. Straight fittings are made from bar stock, and others are made from forgings into its shape. All material confirms its chemical composition and material properties as per internationally recognized standards or customer requirements. Refer to the below table for further details.

Material Standards

Material	Bar Stock	Forging
SS316	ASTM A276	ASTM A182
Carbon Steel	ASTMA108	-
Brass	ASTM B16 ASTM B453	ASTM B283
Aluminium	ASTM B211	ASTM B247
Hastelloy	ASTM B574	ASTM B564
Alloy 20	ASTM B473	ASTM B462
Titanium	ASTM B348	ASTM B381
Alloy 625	ASTM B446	ASTM B564
Alloy 825	ASTM B425	ASTM B564

Our Ferrule fitting consists of a front & back ferrule, a nut that provides no leakage under high pressure & other applications. The front ferrule provides the sealing, while the back ferrule provides tube grips when the nut is turned.

Installation is effortless and can be done using standard available hand tools. Do note that the torque applied during installation is not transmitted to the tubing in any case.

Tube Fittings

On request of the customer, Plating or coating can be provided for improved performance of the tube fittings. Refer to the below table for details.

Plating & Coating

Material	Process
Aluminium	Anodized, Hydrocarbon film
Alloy 20, 400, 600, C-276	Hydrocarbon film
Carbon Steel	Zinc plating
Carbon Steel (welded)	Hydrocarbon film
Titanium	Anodized
Stainless Steel, Brass	Not Applicable

Tube fittings are rated to the cold working pressure as per the below table. Please make the selection as per the pressure at room temperature to avoid any mishaps later.

Pressure rating Calculations (ASME B31.3)								
NPT/ISO Pipe size	Stainless steel & Carbon Steel				Brass			
	Male		Female		Male		Female	
in	psi	bar	psi	bar	psi	bar	psi	bar
1/16	11000	760	6700	460	5500	380	3300	230
1/8	10000	690	6500	440	5000	340	3200	220
1/4	8000	550	6600	450	4000	270	3300	220
3/8	7800	540	5300	360	3900	270	2600	180
1/2	7700	530	4900	330	3800	260	2400	160
3/4	7300	500	4600	320	3600	250	2300	160
1	5300	370	4400	300	2600	180	2200	150
1 1/4	6000	410	5000	350	3000	200	2500	170
1 1/2	5000	340	4600	310	2500	170	2300	150
2	3900	270	3900	270	1900	130	1900	130

Below are a few important points to follow for tube fittings.

- Always select harder material tube fittings as compare to tubing material.
- If tubing and fitting material is the same, then tubing must be fully annealed.
- Surface finish is extremely critical for sealing and must be check. If the tubing has any scratch, marks, wrinkles, then it is not possible to seal.
- Wall thickness must be checked thoroughly and ensure that minimum and maximum values are as per the manufacturer's suggestion.
- If the tubing is an oval shape, never used it because it is not easy to fit in fitting nuts, ferrules, etc.

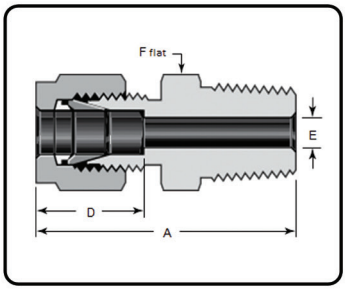

NPT

Tube OD in	NPT Size in	Dimensions mm			
		A	D	E	F
1/16	1/16	23.9	8.60	1.3	7.9
	1/8	26.2			11.1
	1/4	31			14.3
1/8	1/16	29.8	12.70	2.3	11.1
	1/8	30.5			11.1
	1/4	35.6			14.3
	3/8	35.9			17.5
	1/2	42.2			22.2
3/16	1/8	31.3	13.70	3.1	11.1
	1/4	36.4			14.3
1/4	1/16	32.8	15.20	3.1	12.7
	1/8	32.8		4.9	12.7
	1/4	37.9		4.9	14.3
	3/8	38.4		4.9	17.5
	1/2	44.8		4.9	22.2
	3/4	46.3		4.9	27
5/16	1/8	34.1	16.30	4.9	14.3
	1/4	38.7		6.4	14.3
	3/8	39.2		6.4	17.5
3/8	1/8	35.4	16.80	4.9	15.9
	1/4	39.9		7.2	15.9
	3/8	39.9		7.2	17.5
	1/2	46.3		7.2	22.2
	3/4	47.8		7.2	27
	1	54.4		7.2	34.9
1/2	1/8	38.9	22.90	4.9	20.6
	1/4	43.5		7.2	20.6
	3/8	43.5		9.7	20.6
	1/2	49.1		10.5	22.2
	3/4	50.6		10.5	27
	1	57.2		10.5	34.9
5/8	1/4	44.2	24.40	7.2	23.8
	3/8	44.2		9.7	23.8
	1/2	49.1		12	23.8
	3/4	50.6		12.7	27
3/4	3/8	45.8	24.40	10.5	27
	1/2	50.6		12	27
	3/4	50.6		15.8	27
	1	57.2		15.8	34.9
7/8	1/2	50.6	25.90	12	30.2
	3/4	50.6		15.8	30.2
	1	57.2		18.3	34.9
1	1/2	57.5	31.20	12	34.9
	3/4	57.5		15.8	
	1	62.3		22.4	
1 1/8	1	62.3	31.20	22.4	41.3
1 1/4	1	77.3	41.10	22.4	44.5
	1 1/4			27.7	
1 1/2	1 1/2	88.9	50.00	34.1	54
2	2	113.6	67.60	46	69.9

Tube OD	NPT Size in	Dimensions mm			
		A	D	E	F
2	1/8	30.5	12.9	1.7	12
3	1/8	30.5	12.9	2.4	12
	1/4	35.6			14
4	1/8	31.2	13.7	2.4	12
	1/4	36.3			14
6	1/8	32.8	15.3	4.8	14
	1/4	37.9			14
	3/8	38.4			18
	1/2	44.7			22
8	1/8	34.2	16.2	4.8	15
	1/4	38.7		6.4	15
	3/8	39.3		6.4	18
	1/2	45.6		6.4	22
10	1/8	36.3	17.2	4.8	18
	1/4	40.9		7.1	18
	3/8	40.9		7.9	18
	1/2	46.5		7.9	22
	3/4	48.0		7.9	27
12	1/8	38.8	22.8	4.8	22
	1/4	43.4		7.1	22
	3/8	43.4		9.5	22
	1/2	49.0		9.5	22
	3/4	50.5		9.5	27
14	1/4	44.1	24.4	7.1	24
	3/8	44.1		9.5	
	1/2	49.0		11.1	
15	1/2	49	24.4	11.9	24
16	3/8	44.1	24.4	9.5	24
	1/2	49.0		11.9	24
	3/4	50.5		12.7	27
18	1/2	50.5	24.4	11.9	27
	3/4			15.1	
20	1/2	52.3	26	11.9	30
	3/4			15.9	
22	3/4	52.3	26	15.9	30
	1	57.1		18.3	35
25	1/2	57.5	31.3	11.9	35
	3/4	57.5		15.9	
	1	62.3		21.8	
28	1	72.4	36.6	21.8	41
	1 1/4	73.1			46
28	1	75.0	31.6	24.6	41
	1 1/4	77.3			46
30	1 1/4	77.2	39.6	26.2	46
32	1 1/4	79.6	42	28.6	46
38	1 1/2	91.6	49.4	33.7	55

Please note that the dimensions for BSP Tapered threads is same as NPT threads.

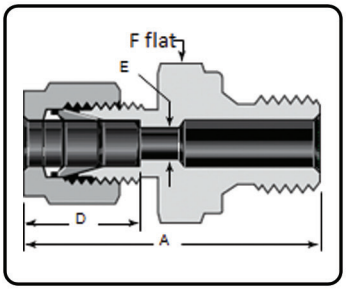

BSP PARALLEL THREADS

Tube OD in	ISO Thread Size in	Dimensions mm			
		A	D	E	F
1/8	1/8	33.3	12.7	2.3	14.3
	1/4	38.1			19.1
	3/8	38.9			22.2
1/4	1/8	35.6	15.2	4.1	14.3
	1/4	40.4		4.8	19.1
	3/8	41.1		4.8	22.2
	1/2	43.2		4.8	27
3/8	1/8	37.8	16.8	4.1	15.9
	1/4	41.9		5.8	19.1
	3/8	42.7		7.1	22.2
	1/2	44.7		7.1	27
1/2	1/4	44.7	22.9	5.8	20.6
	3/8	45.5		7.9	22.2
	1/2	47.5		10.4	27
3/4	1/2	48.8	24.4	11.9	27
	3/4	52.1		15.7	33.3
1	1/2	55.6	31.2	11.9	34.9
	3/4	57.7		16	34.9
	1	59.7		19.8	41.3

Tube OD	ISO Thread Size in	Dimensions mm			
		A	D	E	F
2	1/8	33.3	12.9	1.7	14
3	1/8	33.3	12.9	2.4	14
	1/4	38.1			19
4	1/8	34.0	13.7	2.4	14
6	1/8	35.6	15.3	4.0	14
	1/4	40.4		4.8	19
	3/8	41.1		4.8	22
	1/2	43.2		4.8	27
8	1/8	36.6	16.2	4.0	15
	1/4	41.4		5.9	19
	3/8	42.2		6.4	22
	1/2	44.2		6.4	27
10	1/4	42.2	17.2	5.9	19
	3/8	42.9		7.9	22
	1/2	45.0		7.9	27
12	1/4	44.5	22.8	5.9	22
	3/8	45.5		7.9	22
	1/2	47.5		9.5	27
	3/4	52.1		9.5	35
14	3/8	43.9	24.4	7.9	24
	1/2	47.5		11.1	27
15	3/8	45.5	24.4	7.9	24
	1/2	47.5		11.9	27
	3/4	52.8		11.9	35
16	3/8	45.5	24.4	7.9	24
	1/2	47.5		11.9	27
	3/4	52.8		12.7	35
18	1/2	48.8	24.4	11.9	27
	3/4	52.1		15.1	35
20	1/2	50.5	26.0	11.9	30
	3/4	52.6		15.9	35
22	3/4	52.6	26.0	15.9	35
	1	54.9		18.3	41
25	3/4	57.7	31.3	15.9	35
	1	59.7		19.8	41
28	1	69.9	36.6	19.8	41
	1 1/4	72.9		21.8	50
	1	72.5	31.6	19.8	41
	1 1/4	77.1		24.6	54
30	1 1/4	76.7	39.6	26.2	50
32	1 1/4	79.2	42.0	28.6	50
38	1 1/2	90.9	49.4	31.8	55

Please note that the dimensions for BSP parallel threads (RP) is same as BSP Parallel threads (RS).

O Ring Male Connector

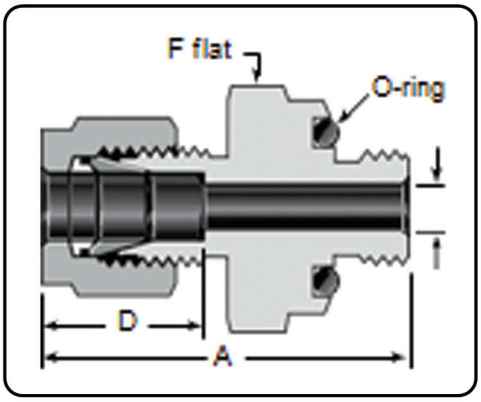

NPT

Tube OD in	NPT Size in	Dimensions mm			
		A	D	E	F
1/8	1/8	32.80	12.70	2.30	19.1
1/4	1/8 1/4	35.1 38.4	15.20	4.80	19.1 23.8
3/8	1/4 3/8 1/2	39.9 41.4 47	16.80	7.10	23.8 28.6 33.3
1/2	1/2	49.80	22.90	10.40	33.3

STRAIGHT THREAD

Tube OD in	SAE/MS Thread Size in	Dimensions mm			
		A	D	E	F
1/16	5/16-24	26.70	8.60	1.30	14.3
1/8	5/16-24	32.80	12.70	2.30	14.3
3/16	3/8-24	34.30	13.70	3.00	15.9
1/4	7/16-20	38.40	15.20	4.80	19.1
5/16	1/2-20	40.60	16.30	6.40	22.2
3/8	9/16-18	42.40	16.80	7.10	23.8
1/2	3/4-16	46.00	22.90	10.40	28.6
3/4	1 1/16-12	52.30	24.40	15.70	38.1
1	1 5/16-12	58.20	31.20	22.40	44.5

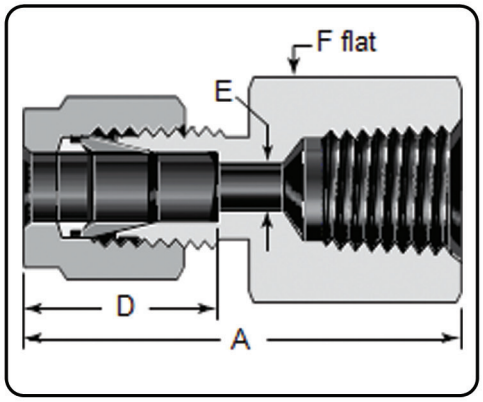

NPT

Tube OD in	NPT Size in	Dimensions mm			
		A	D	E	F
1/16	1/16 1/8	23.6 24.4	8.60	1.30	11.1 14.3
1/8	1/8 1/4	28.7 33.5	12.70	2.30	14.3 19.1
3/16	1/8	29.70	13.70	3.00	14.3
1/4	1/8 1/4 3/8 1/2	31.2 35.8 37.6 42.4	15.20	4.80	14.3 19.1 22.2 27
5/16	1/8 1/4	32 36.8	16.30	6.40	14.3 19.1
3/8	1/8 1/4 3/8 1/2 3/4	32.8 37.6 39.1 43.9 47.8	16.80	7.10	15.9 19.1 22.2 27 33.3
1/2	1/4 3/8 1/2 3/4	40.4 41.9 46.7 48.3	22.90	10.40	20.6 22.2 27 33.3
5/8	3/8 1/2 3/4	41.9 46.7 48.3	24.40	12.70	23.8 27 33.3
3/4	1/2 3/4	46.7 48.3	24.40	15.70	27 33.3
7/8	3/4	49.80	25.90	18.30	33.3
1	3/4 1	53.3 62.2	31.20	22.40	34.9 41.3
1 1/4	1 1/4	74.70	41.10	27.70	54
1 1/2	1 1/2	83.30	50.00	34.00	60.3
2	2	101.60	67.60	46.00	73

Tube OD	NPT Size in	Dimensions mm			
		A	D	E	F
3	1/8 1/4	28.7 33.5	12.9	2.4	14 19
4	1/8	29.7	13.7	2.4	14
6	1/8 1/4 3/8 1/2	31.3 35.8 37.6 42.5	15.3	4.8	14 19 22 27
8	1/8 1/4 3/8 1/2	32.1 37.0 38.5 43.3	16.2	6.4	15 19 22 27
10	1/4 3/8 1/2	37.8 39.4 44.2	17.2	7.9	19 22 27
12	1/4 3/8 1/2	40.3 41.9 46.7	22.8	9.5	22 22 27
15	1/2	46.7	24.4	11.9	27
16	1/2	46.9	24.4	12.7	27
20	1/2 3/4	47.9 49.7	26.0	15.9	30 35
22	3/4 1	49.7 57.9	26.0	18.3	35 41
25	3/4 1	53.4 62.3	31.3	21.8	35 41

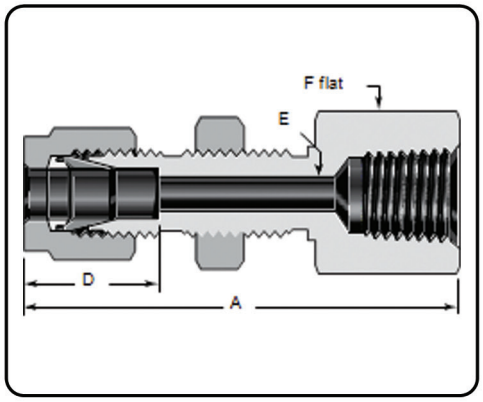

NPT

Tube OD in	NPT Size in.	Dimensions mm					
		A	D	E	F	Panel Hole Size	Max Panel Thickness
1/8	1/8	44.70	12.70	2.30	14.3	8.3	12.70
1/4	1/8 1/4	47 51.8	15.20	4.80	15.9 19.1	11.5	10.20
3/8	1/4	55.10	16.80	7.10	19.1	14.7	11.20
1/2	3/8 1/2	61.7 66.5	22.90	10.40	23.8 27	19.4	12.70

Tube OD	NPT Size in.	Dimensions mm					
		A	D	E	F	Panel Hole Size	Max Panel Thickness
6	1/4	51.8	15.3	4.8	19	11.5	10.2
12	1/2	66.5	22.8	9.5	27	19.5	12.7

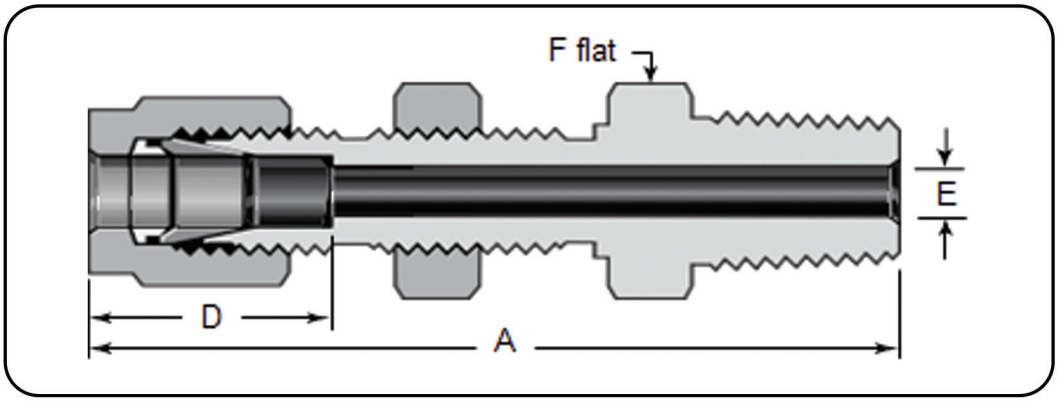

NPT

Tube OD in	NPT Size in.	Dimensions mm					
		A	D	E	F	Panel Hole Size	Max Panel Thickness
1/8	1/8	46.50	12.70	2.30	12.7	8.3	12.70
1/4	1/8 1/4	49.5 54.1	15.20	4.80	15.9	11.5	10.20
3/8	1/4 3/8 1/2	57.4 57.4 63.8	16.80	7.10	19.1 19.1 22.2	14.7	11.20
1/2	3/8 1/2	63.2 68.8	22.90	9.7 10.4	23.8	19.4	12.70
3/4	3/4	76.20	24.40	15.70	30.2	25.8	16.80
1	1	93.20	31.20	22.40	41.3	33.7	19.10

Tube OD	NPT Size in.	Dimensions mm					
		A	D	E	F	Panel Hole Size	Max Panel Thickness
6	1/8 1/4	49.5 53.6	15.3	4.8	16	11.5	10.2
12	1/2	68.8	22.8	9.5	24	19.5	12.7

Connector

Port Connector

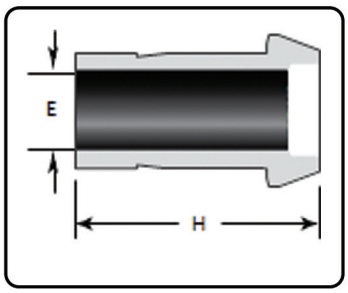

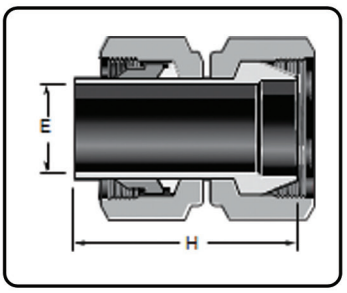

UP TO 25 MM

Tube OD in	Dimensions mm	
	E	H
1/16	0.80	13.70
1/8	2.00	22.40
1/4	4.30	24.90
5/16	5.60	25.90
3/8	6.90	26.70
1/2	9.40	36.30
5/8	11.90	37.80
3/4	14.70	37.80
1	20.30	49.30
1 1/4	25.90	69.10
1 1/2	31.80	84.10
2	43.70	115.80

ABOVE 25 MM

Tube OD	Dimensions mm	
	E	H
3	1.9	22.2
6	4.1	25.0
8	5.6	26.0
10	7.1	27.1
12	8.8	36.2
15	11.2	37.8
16	12.0	37.8
18	13.9	37.8
20	15.5	39.4
25	19.9	49.3
28	22.6	49.0
28	22.5	63.5
30	24.3	67.6
32	26.5	69.7
38	31.6	81.9

Reducing Port Connector

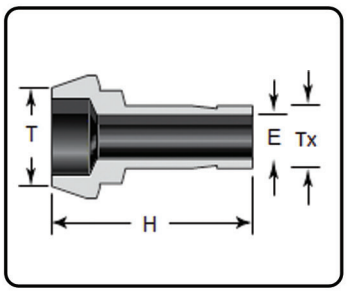

Tube OD in		Dimensions mm	
T	Tx	E	H
1/8	1/16	0.80	18.30
1/4	1/16	0.80	19.10
	1/8	2.00	22.90
3/8	1/8	2.00	23.40
	1/4	4.30	25.40
1/2	1/4	4.30	29.70
	3/8	6.90	30.70
3/4	1/2	9.40	37.80
1	1/2	9.40	42.90
	3/4	14.70	43.70

Tube OD		Dimensions mm	
T	Tx	E	H
6	3	1.9	22.9
8	6	4.1	25.4
10	6	4.1	25.8
	8	5.6	26.3
12	6	4.1	29.6
	8	5.6	30.1
	10	7.1	30.6
16	12	8.8	37.5
28	25	19.8	56.5
32	25	19.8	60.3
38	25	19.8	65.8

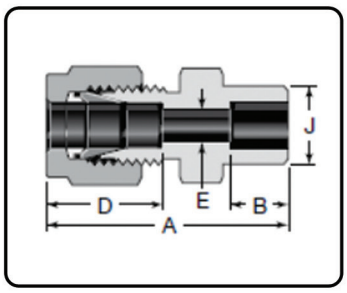

SOCKET WELD

Tube OD in	Socket Weld Size in	Dimensions mm				
		A	B	D	E	J
1/8	1/8	29.00	2.50	12.70	2.30	7.40
1/4	1/4	33.50	7.10	15.20	4.80	12.20
3/8	3/8	37.60	7.90	16.80	7.10	15.20
1/2	1/2	41.10	9.70	22.90	10.40	18.50
3/4	3/4	43.40	11.20	24.40	15.70	26.40
1	1	52.60	15.70	31.20	22.40	34.50

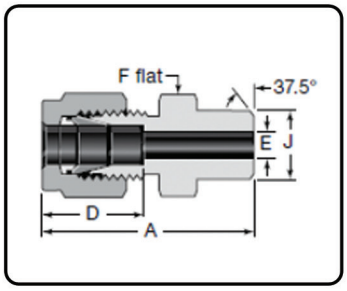

BUTT WELD

Tube OD in	Pipe Weld Size in	Dimensions mm				
		A	D	E	F	J
1/8	1/8	30.50	12.70	2.30	11.1	10.30
3/16	1/8	31.20	13.70	3.00	11.1	10.30
1/4	1/8 1/4	32.8 37.8	15.20	4.80	12.7 14.3	10.3 13.7
5/16	1/8 1/4	34 38.6	16.30	5.3 6.4	14.3	10.3 13.7
3/8	1/4 3/8 1/2 3/4	39.9 39.9 46.2 47.8	16.80	7.10	15.9 17.5 22.2 27	13.7 17 21.3 26.7
1/2	3/8 1/2 3/4 1	43.4 49 50.5 57.2	22.90	10.40	20.6 22.2 27 34.9	17.1 21.3 26.7 33.4
5/8	1/2	49.00	24.40	12.70	23.8	21.30
3/4	1/2 3/4	50.50	24.40	14 15.7	27	21.3 26.7
1	1	62.20	31.20	22.40	34.9	33.40
1 1/4	1 1/4	77.20	41.10	27.70	44.5	42.20
1 1/2	1 1/2	88.90	50.00	34.00	54	48.30
2	2	113.50	67.60	46.00	69.9	60.30

Tube OD	Pipe Weld Size in.	Dimensions mm				
		A	D	E	F	J
3	1/8	30.5	12.9	2.4	12	10.3
4	1/8	31.2	13.7	2.4	12	10.3
6	1/8 1/4	32.8 37.9	15.3	4.8	14	10.3 13.7
8	1/8 1/4 1/2	34.2 38.7 45.6	16.2	5.4 6.4 6.4	15 15 22	10.3 13.7 21.3
10	1/4 3/8 1/2	40.9 40.9 46.5	17.2	7.5 7.9 7.9	18 18 22	13.7 17.1 21.3
12	1/4 3/8 1/2 3/4	43.4 43.4 49.0 50.5	22.8	7.5 9.5 9.5 9.5	22 22 22 27	13.7 17.1 21.3 26.7
14	3/8	44.1	24.4	10.7	24	17.1
15	1/2	49.0	24.4	11.9	24	21.3
16	1/2	49.0	24.4	12.7	24	21.3
18	1/2	50.5	24.4	13.9	27	21.3
30	1 1/4	77.2	39.6	26.2	46	42.2
32	1 1/4	79.6	42.0	28.6	46	42.2
38	1 1/2	91.6	49.4	33.7	55	48.3

Elbow

Union Elbow

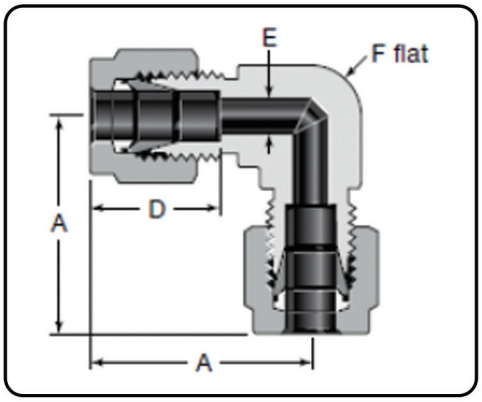

Tube OD in	Dimensions mm			
	A	D	E	F
1/16	17.80	8.60	1.30	9.5
1/8	22.40	12.70	2.30	9.5
3/16	25.40	13.70	3.00	12.7
1/4	26.90	15.20	4.80	12.7
5/16	28.70	16.30	6.40	12
3/8	30.50	16.80	7.10	15.9
1/2	36.10	22.90	10.40	20.6
5/8	38.10	24.40	12.70	23.8
3/4	39.90	24.40	15.70	27
7/8	44.70	25.90	18.30	34.9
1	49.00	31.20	22.40	34.9
1 1/8	55.10	31.20	24.60	42.9
1 1/4	67.80	41.10	27.70	42.9
1 1/2	78.70	50.00	34.00	51
2	107.20	67.60	46.00	69.9

Tube OD	Dimensions mm			
	A	D	E	F
3	22.3	12.9	2.4	9.5
4	25.4	13.7	2.4	12.7
6	27.0	15.3	4.8	12.7
8	28.8	16.2	6.4	14.3
10	31.5	17.2	7.9	17.5
12	36.0	22.8	9.5	20.6
14	38.0	24.4	11.1	23.8
15	38.0	24.4	11.9	23.8
16	38.0	24.4	12.7	23.8
18	39.8	24.4	15.1	27
20	44.6	26.0	15.9	34.9
22	44.6	26.0	18.3	34.9
25	49.1	31.3	21.8	34.9
28	64.0	36.6	21.8	41
	55.4	31.6	24.6	42.9
30	69.9	39.6	26.2	46
32	72.3	42.0	28.6	46
38	84.0	49.4	33.7	55
50	106	65.0	45.2	69.9

Elbow

Swivel Elbow

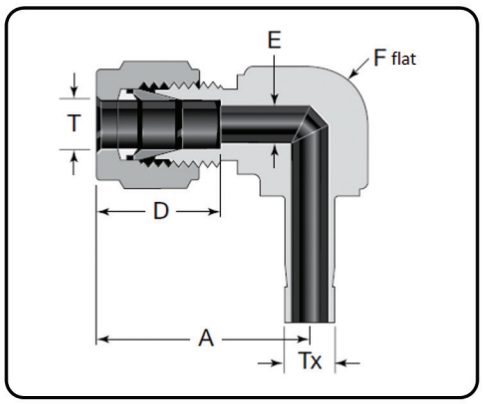

Tube OD in		Dimensions mm			
T	Tx	A	D	E	F
1/4	1/4	26.90	15.20	4.30	12.7
3/8		30.50	16.80	4.30	15.9
3/8	3/8	30.50	16.80	6.90	15.9
1/2		36.10	22.90	6.90	20.6
1/2	1/2	36.10	22.90	9.40	20.6

Tube OD		Dimensions mm			
T	Tx	A	D	E	F
6	6	27.0	15.3	4.6	12.7
12	12	38.1	22.8	8.8	23.8

Male Elbow Connector

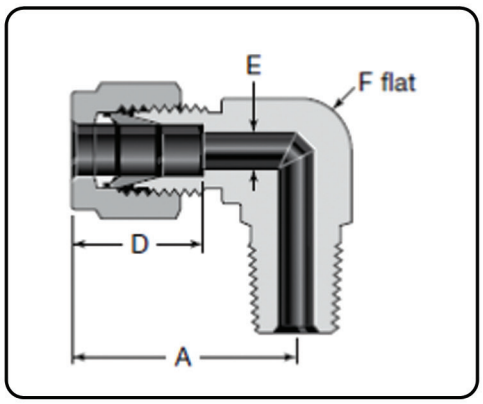

NPT

Tube OD in	NPT Size in	Dimensions mm			
		A	D	E	F
1/16	1/16 1/8	19.10	8.60	1.30	11.1
1/8	1/16 1/8 1/4	23.6 23.6 24.6	12.70	2.30	11.1 11.1 12.7
3/16	1/8 1/4	25.40	13.70	3.00	12.7
1/4	1/16 1/8 1/4 3/8 1/2	26.9 26.9 26.9 29.7 31.8	15.20	3 4.8 4.8 4.8 4.8	12.7 12.7 12.7 17.5 20.6
5/16	1/8 1/4 3/8	28.7 28.7 30.5	16.30	4.8 6.4 6.4	14.3 14.3 17.5
3/8	1/8 1/4 3/8 1/2 3/4	30.5 30.5 31.2 33.3 37.1	16.80	4.8 7.1 7.1 7.1 7.1	15.9 15.9 17.5 20.6 27
1/2	1/4 3/8 1/2 3/4	36.1 36.1 36.1 39.9	22.90	7.1 9.7 10.4 10.4	20.6 20.6 20.6 27
5/8	3/8 1/2 3/4	38.1 38.1 39.9	24.40	9.7 11.9 12.7	23.8 23.8 27
3/4	1/2 3/4	39.90	24.40	11.9 15.7	27
7/8	3/4	44.70	25.90	15.7	34.9
1	3/4 1	49.00	31.20	15.7 22.4	34.9
1 1/4	1 1/4	67.80	41.10	27.7	42.9
1 1/2	1 1/2	78.70	50.00	34	51
2	2	107.20	67.60	46	69.9

Tube OD	NPT Size in	Dimensions mm			
		A	D	E	F
3	1/8 1/4	23.6 24.6	12.9	2.4	11.1 12.7
4	1/8 1/4	25.4	13.7	2.4	12.7
6	1/8 1/4 3/8 1/2	27.0 27.0 29.8 31.8	15.3	4.8	12.7 12.7 17.5 20.6
8	1/8 1/4 3/8 1/2	28.8 28.8 30.6 32.6	16.2	4.8 6.4 6.4 6.4	14.3 14.3 17.5 20.6
10	1/8 1/4 3/8 1/2	31.5 31.5 31.5 33.5	17.2	4.8 7.1 7.9 7.9	17.5 17.5 17.5 20.6
12	1/4 3/8 1/2 3/4	36.0 36.0 36.0 39.8	22.8	7.1 9.5 9.5 9.5	20.6 20.6 20.6 27
14	1/2	38.0	24.4	11.1	23.8
15	1/2	38.0	24.4	11.9	23.8
16	3/8 1/2 3/4	38.0 38.0 39.8	24.4	9.5 11.9 12.7	23.8 23.8 27
18	1/2 3/4	39.8	24.4	11.9 15.1	27
20	1/2 3/4	44.6	26.0	11.9 15.9	34.9
22	3/4 1	44.6	26.0	15.9 18.3	34.9
25	3/4 1	49.1	31.3	15.9 21.8	34.9
30	1 1/4	69.9	39.6	26.2	46
32	1 1/4	72.3	42.0	27.8	46
38	1 1/2	84.0	49.4	33.7	55

Male Elbow Connector

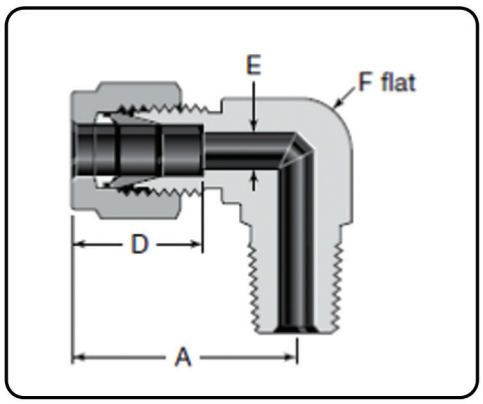

BSPT THREAD

Tube OD in	ISO Thread Size in	Dimensions m			
		A	D	E	F
1/8	1/8 1/4	21.1 24.6	12.70	2.30	11.1 12.7
1/4	1/8 1/4 3/8 1/2	26.9 26.9 29.7 31.8	15.20	4.80	12.7 12.7 17.5 20.6
5/16	1/4	28.70	16.30	6.40	14.3
3/8	1/8 1/4 3/8	30.5 30.5 31.2	16.80	7.10	15.9 15.9 17.5
1/2	1/4 3/8 1/2	36.10	22.90	7.1 9.7 10.4	20.6
3/4	1/2	39.90	24.40	11.90	34.9
1	1	49.00	31.20	22.40	34.9

Tube OD	ISO Thread Size in	Dimensions mm			
		A	D	E	F
3	1/8 1/4	23.6 24.6	12.9	2.4	11.1 12.7
4	1/8 1/4	25.4	13.7	2.4	12.7
6	1/8 1/4 3/8 1/2	27.0 27.0 29.8 31.8	15.3	4.8	12.7 12.7 17.5 20.6
8	1/8 1/4 3/8 1/2	28.8 28.8 30.6 32.6	16.2	4.8 6.4 6.4 6.4	14.3 14.3 17.5 20.6
10	1/4 3/8 1/2	31.5 31.5 33.5	17.2	7.1 7.9 7.9	17.5 17.5 20.6
12	1/8 1/4 3/8 1/2 3/4	36.0 36.0 36.0 36.0 39.8	22.8	4.8 7.1 9.5 9.5 9.5	20.6 20.6 20.6 20.6 27
14	1/2	38.1	24.4	11.1	23.8
15	1/2	38.1	24.4	11.9	23.8
16	3/8 1/2	38.0	24.4	9.5 11.9	23.8
18	1/2 3/4	39.8	24.4	11.9 15.1	27
20	1/2 3/4	44.6	26.0	11.9 15.9	34.9
22	3/4 1	44.6	26.0	15.9 18.3	34.9
25	3/4 1	49.1	31.3	15.9 21.8	34.9
28	1	64.0	36.6	21.8	41
	1	55.4	31.6	22.2	42.9

45 deg. Male Elbow

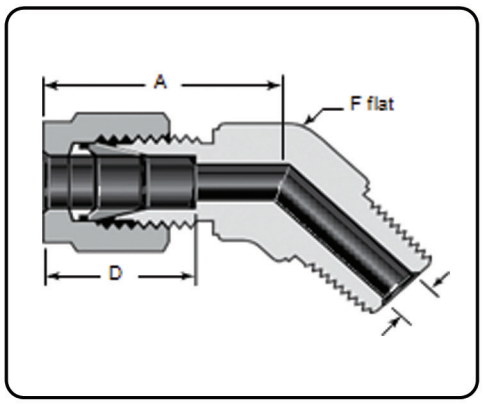

NPT

Tube OD in	NPT Size in	Dimensions mm			
		A	D	E	F
1/4	1/8 1/4	24.60	15.20	4.80	12.7
3/8	1/8 1/4 3/8	27.9 27.9 29.2	16.80	4.8 7.1 7.1	15.9 15.9 20.6
1/2	3/8 1/2	32.00	22.90	9.7 10.4	20.6
3/4	3/4	33.80	24.40	15.70	27
1	1	40.40	31.20	22.40	34.9

Positionable Male Elbow

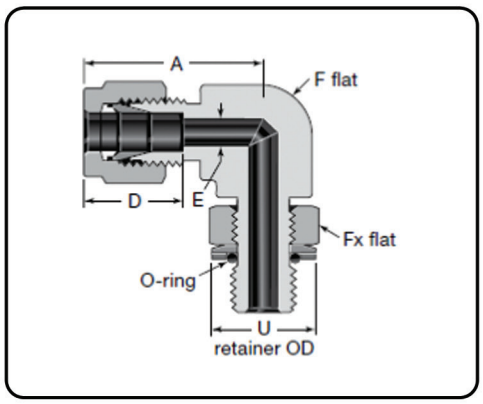

BSPP THREAD

Tube OD in	ISO Thread Size in.	Dimensions mm					
		A	D	E	F	Fx	U
1/4	1/8 1/4	26.9 29	15.20	4.1 4.8	12.7 15.9	14.3 19.1	15.2 20.3
3/8	1/4 3/8	30.5 33.3	16.80	5.8 7.1	15.9 20.6	19.1 22.2	20.3 24.4
1/2	1/4 3/8 1/2	36.1 36.1 38.1	22.90	5.8 7.9 10.4	20.6 20.6 23.8	19.1 22.2 27	20.3 24.4 29.5
5/8	1/2	38.10	24.40	11.90	23.8	27	29.50
3/4	1/2 3/4	39.90	24.40	11.9 15.7	27	27 34.9	29.5 36.6
1	3/4 1	49.00	31.20	15.7 19.8	34.9	34.9 41.3	36.3 46.2

Tube OD	ISO Thread Size in.	Dimensions mm					
		A	D	E	F	Fx	U
6	1/8 1/4	27.0 29.0	15.3	4.0 4.8	12.7 15.9	14.3 19.1	15.2 20.3
8	1/8 1/4	28.8 29.9	16.2	4.0 5.9	14.3 15.9	14.3 19.1	15.2 20.3
10	1/4 3/8	33.5	17.2	5.9 7.9	20.6	19.1 22.2	20.3 24.4
12	1/4 3/8 1/2 3/4	36.0 36.0 38.0 39.8	22.8	5.9 7.9 9.5 9.5	20.6 20.6 23.8 27	19.1 22.2 27 34.9	20.3 24.4 29.5 36.3

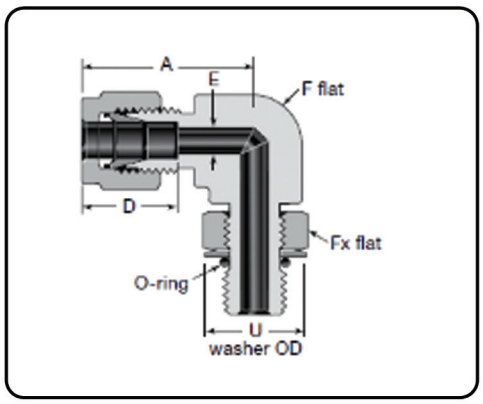

STRAIGHT THREAD

Tube OD in	SAE/MS Thread Size in	Dimensions mm					
		A	D	E	F	Fx	U
1/4	7/16-20 9/16-18	28.4 30.5	15.20	4.80	12.7 15.9	14.3 17.5	16.5 20.1
5/16	1/2-20	30.20	16.30	5.80	14.3	15.9	18.30
3/8	7/16-20 9/16-18 3/4-16	32 32 34.8	16.80	5.1 7.1 7.1	15.9 15.9 20.6	14.3 17.5 22.2	16.5 20.1 25.7
1/2	9/16-18 3/4-16	37.60	22.90	7.1 10.4	20.6	17.5 22.2	20.1 25.7
5/8	7/8-14	39.60	24.40	12.70	23.8	25.4	29.50
3/4	1 1/16-12	41.40	24.40	15.70	27	31.8	36.60
7/8	1 3/16-12	43.20	25.90	18.30	30.2	34.9	40.40
1	1 5/16-12	50.50	31.20	22.40	34.9	38.1	43.90
1 1/4	1 5/8-12	67.80	41.10	27.70	42.9	47.6	54.90
1 1/2	1 7/8-12	78.00	50.00	34.00	51	54	62.20
2	2 1/2-12	107.20	67.60	46.00	69.9	69.9	80.30

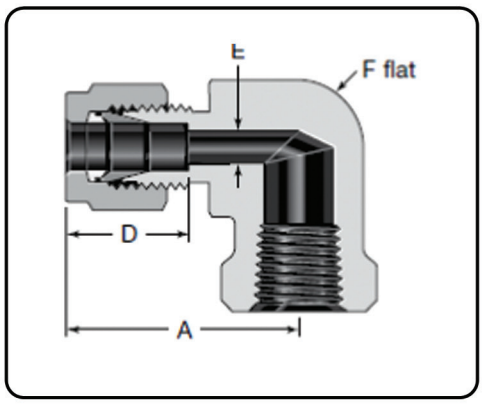

NPT

Tube OD in	NPT Size in	Dimensions mm A	D	E	F
1/8	1/8 1/4	24.6 27.4	12.70	2.30	12.7 17.5
3/16	1/8	25.40	13.70	3.00	12.7
1/4	1/8 1/4 3/8 1/2	26.9 29.7 31.8 34.5	15.20	4.80	12.7 17.5 20.6 25.4
5/16	1/8 1/4	28.7 30.5	16.30	6.40	14.3 17.5
3/8	1/8 1/4 3/8 1/2	30.5 31.2 33.3 36.1	16.80	7.10	15.9 17.5 20.6 25.4
1/2	1/4 3/8 1/2	36.1 36.1 38.9	22.90	10.40	20.6 20.6 25.4
5/8	3/8 1/2	38.1 39.9	24.40	12.70	23.8 27
3/4	1/2 3/4	39.9 44.7	24.40	15.70	27 34.9
7/8	3/4	44.70	25.90	18.30	34.9
1	3/4 1	49 53.6	31.20	22.40	34.9 42.9

Tube OD	NPT Size in	Dimensions mm A	D	E	F
6	1/8 1/4 1/2	27.0 29.8 34.6	15.3	4.8	12.7 17.5 25.4
8	1/4	30.6	16.2	6.4	17.5
10	1/8 1/4	31.5 33.5	17.2	7.9	17.5 20.6
12	1/4 1/2	36.0 38.8	22.8	9.5	20.6 25.4
16	1/2	39.5	24.4	12.7	27

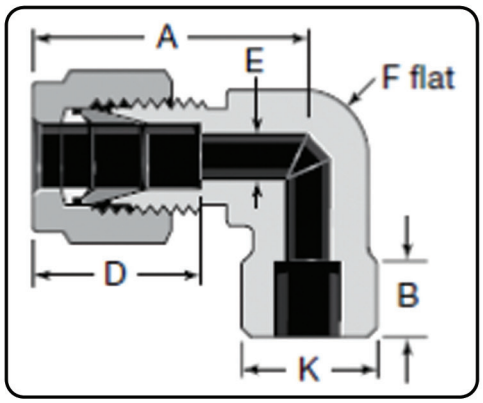

SOCKET WELD

Tube OD in	Socket Weld Size in	Dimensions mm					
		A	B	D	E	F	K
1/4	1/4	26.90	7.10	15.20	4.80	12.7	12.70
3/8	3/8	30.50	7.90	16.80	7.10	15.9	16.00
1/2	1/2	36.10	9.70	22.90	10.40	20.6	20.60
3/4	3/4	39.90	11.20	24.40	15.70	27	26.90
1	1	49.00	15.70	31.20	22.40	34.9	35.10

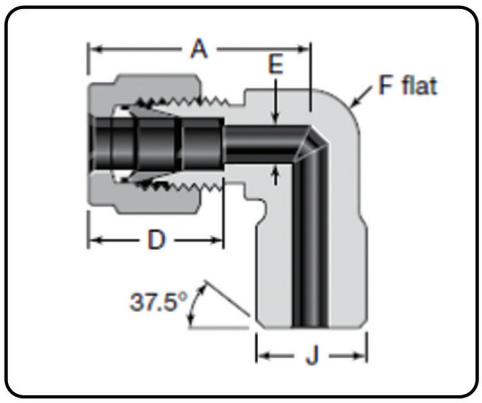

BUTTWELD

Tube OD in	Pipe Weld Size in	Dimensions mm				
		A	D	E	F	J
1/4	1/8 1/4	26.90	15.20	4.80	12.7	10.3 13.7
3/8	1/4	30.50	16.80	7.10	15.9	13.7
1/2	1/2	36.10	22.90	10.40	20.6	21.3
3/4	3/4	39.90	24.40	15.70	27	26.7

Union Tee

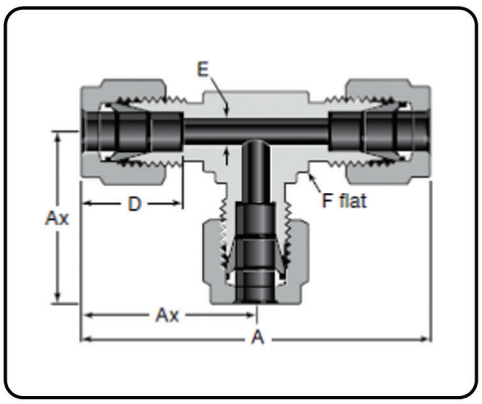

Tube OD in	Dimensions mm				
	A	Ax	D	E	F
1/16	35.60	17.80	8.60	1.30	9.5
1/8	44.70	22.40	12.70	2.30	9.5
3/16	48.80	24.40	13.70	3.00	11.1
1/4	53.80	26.90	15.20	4.80	12.7
5/16	59.40	29.70	16.30	6.40	15.9
3/8	61.00	30.50	16.80	7.10	15.9
1/2	72.10	36.10	22.90	10.40	20.6
5/8	77.70	38.90	24.40	12.70	25
3/4	79.80	39.90	24.40	15.70	27
7/8	89.40	44.70	25.90	18.30	34.9
1	98.00	49.00	31.20	22.40	34.9
1 1/8	110.20	55.10	31.20	24.60	42.9
1 1/4	135.60	67.80	41.10	27.70	42.9
1 1/2	157.50	78.70	50.00	34.00	51
2	214.40	107.20	67.60	46.00	69.9

Tube OD	Dimensions mm				
	A	Ax	D	E	F
2	44.7	22.3	12.9	1.7	9.5
3	44.7	22.3	12.9	2.4	9.5
4	50.8	25.4	13.7	2.4	12.7
6	53.9	27.0	15.3	4.8	12.7
8	59.7	29.9	16.2	6.4	15.9
10	63.0	31.5	17.2	7.9	17.5
12	72.0	36.0	22.8	9.5	20.6
14	77.6	38.8	24.4	11.1	25.4
15	77.6	38.8	24.4	11.9	25.4
16	77.6	38.8	24.4	12.7	25.4
18	79.6	39.8	24.4	15.1	27
20	89.3	44.6	26.0	15.9	34.6
22	89.3	44.6	26.0	18.3	34.6
25	98.3	49.1	31.3	21.8	34.9
28	128	64.0	36.6	21.8	41
	103	51.4	31.6	24.6	42.9
30	140	69.9	39.6	26.2	46
32	145	72.3	42.0	28.6	46
38	168	84.0	49.4	33.7	55
50	211	106	65.0	45.2	69.9

Male Run Tee

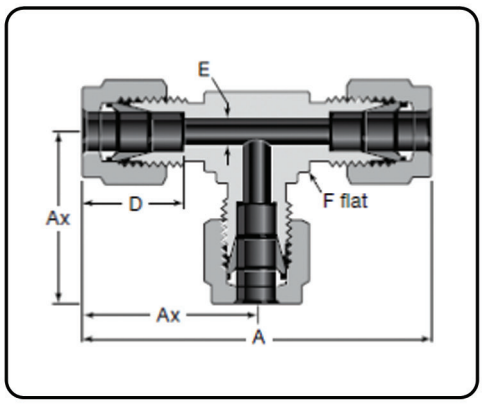

NPT

Tube OD in	NPT Size in.	Dimensions mm				
		A	Ax	D	E	F
1/8	1/8 1/4	41.4 48	23.6 24.6	12.70	2.30	11.1 12.7
3/16	1/8	42.20	24.40	13.70	3.00	11.1
1/4	1/8 1/4	45.7 50.3	26.90	15.20	4.80	12.7
5/16	1/8	50.50	29.70	16.30	4.80	15.9
3/8	1/4 3/8	55.9 61.5	30.5 33.3	16.80	7.10	15.9 20.6
1/2	3/8 1/2	64.3 69.9	36.10	22.90	9.7 10.4	20.6
5/8	1/2	73.20	38.10	24.40	11.90	23.8
3/4	3/4	76.70	39.90	24.40	15.70	27

Tube OD	NPT Size in.	Dimensions mm				
		A	Ax	D	E	F
6	1/8 1/4	45.8 50.3	27.0	15.3	4.8	12.7
8	1/4	55.3	29.9	16.2	6.4	15.9
12	1/4 1/2	64.2 69.0	36.0	22.8	7.1 9.5	20.6
16	1/2	73.1	38.0	24.4	11.9	23.8

Positionable Male Run Tee

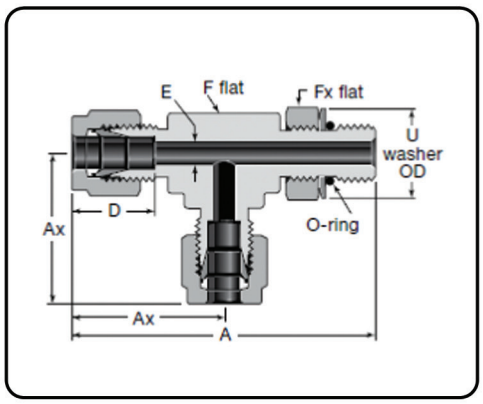

STRAIGHT THREAD

Tube OD in	SAE/MS Thread Size in	Dimensions mm						
		A	Ax	D	E	F	Fx	U
1/4	7/16-20	56.90	28.40	15.20	4.80	12.7	14.3	16.50
3/8	9/16-18	64.30	32.00	16.80	7.10	15.9	17.5	20.10
1/2	3/4-16	75.40	37.60	22.90	10.40	20.6	22.2	25.70
3/4	1 1/16-12	90.20	41.40	24.40	15.70	27	31.8	36.60
1	1 5/16-12	104.10	50.50	31.20	22.40	34.9	38.1	43.90
1 1/4	1 5/8-12	126.00	67.80	41.10	27.70	42.9	47.6	54.90
1 1/2	1 7/8-12	138.40	78.00	50.00	34.00	51	54	62.20
2	2 1/2-12	178.80	107.20	67.60	46.00	69.9	69.9	80.30

Positionable Male Run Tee

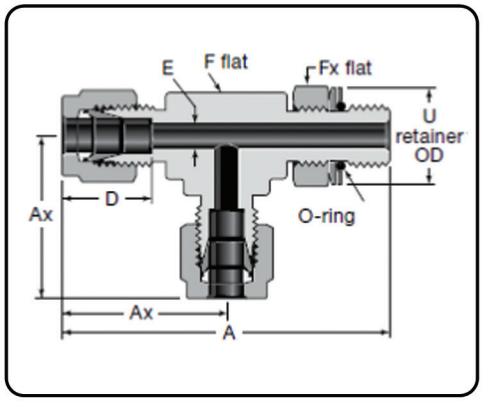

BSPP

Tube OD in	ISO Thread Size in.	Dimensions mm						
		A	Ax	D	E	F	Fx	U
1/4	1/8 1/4	53.3 61.2	26.9 29	15.20	4.1 4.8	12.7 15.9	14.3 19.1	15.2 20.3
3/8	1/4	62.70	30.50	16.80	5.80	15.9	19.1	20.30
1/2	3/8 1/2	73.2 81.5	36.1 38.1	22.90	7.9 10.4	20.6 23.8	22.2 27	24.4 29.5
5/8	1/2	81.50	38.10	24.40	11.90	23.8	27	29.50
3/4	3/4 1/2	8.6 85.1	39.90	24.40	15.7 11.9	27	34.9 27	36.3 29.5
1	1	102.60	49.00	31.20	19.80	34.9	41.3	46.20

Tube OD	ISO Thread Size in.	Dimensions mm						
		A	Ax	D	E	F	Fx	U
6	1/8 1/4	53.4 61.2	27.0 29.0	15.3	4.0 4.8	12.7 15.9	14.3 19.1	15.2 20.3
8	1/8 1/4	56.3 62.1	28.8 29.9	16.2	4.0 6.4	14.3 15.9	14.3 19.1	15.2 20.3
10	1/4	68.6	33.5	17.2	5.9	20.3	19.1	20.3
12	3/8 1/2	73.1 81.5	36.0 38.0	22.8	7.9 9.5	20.6 23.8	22.2 27	24.4 29.5

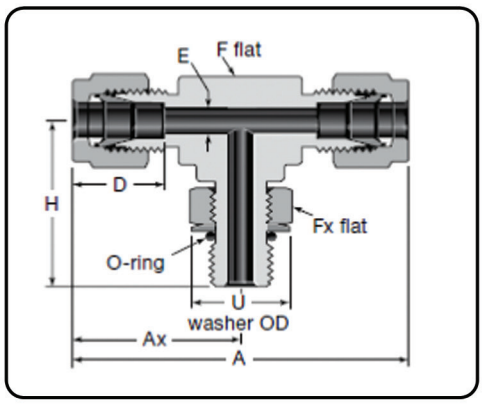

STRAIGHT THREAD

Tube OD in	SAE/MS Thread Size in	Dimensions mm							
		A	Ax	D	E	F	Fx	H	U
1/4	7/16-20	56.90	28.40	15.20	4.80	12.70	14.30	28.40	16.50
3/8	9/16-18	64.00	32.00	16.80	7.10	15.90	17.50	32.30	20.10
1/2	3/4-16	75.20	37.60	22.90	10.40	20.60	22.20	37.80	25.70
3/4	1 1/16-12	82.80	41.40	24.40	15.70	27.00	69.90	48.80	36.60
1	1 5/16-12	101.10	50.50	31.20	22.40	34.90	38.10	53.60	43.90
1 1/4	1 5/8-12	135.60	67.80	41.10	27.70	42.90	47.60	58.20	54.90
1 1/2	1 7/8-12	156.00	78.00	50.00	34.00	50.80	54.00	62.20	62.20
2	2 1/2-12	214.40	107.20	67.60	46.00	69.90	69.90	70.40	80.30

Positionable Branch Tee

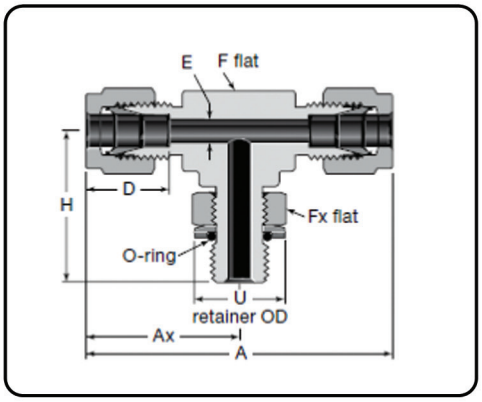

BSPP

Tube OD in	ISO Thread Size in.	Dimensions mm							
		A	Ax	D	E	F	Fx	H	U
1/4	1/8 1/4	53.8 57.9	26.9 29	15.20	4.1 4.8	12.7 15.9	14.3 19.1	26.4 32.3	15.2 20.3
3/8	1/4	61.00	30.50	16.80	5.80	15.9	19.1	32.30	20.30
1/2	3/8 1/2	72.1 76.2	36.1 38.1	22.90	7.9 10.4	20.6 23.8	22.2 27	37.1 43.4	24.4 29.5
5/8	1/2	76.20	38.10	24.40	11.90	23.8	27	43.40	29.50
3/4	3/4 1/2	79.80	39.90	24.40	15.7 11.9	27	34.9 27	48.8 45.2	36.3 29.5
1	1	98.00	49.00	31.20	19.80	34.9	41.3	53.60	48.80

Tube OD	ISO Thread Size in.	Dimensions mm							
		A	Ax	D	E	F	Fx	H	U
6	1/8 1/4	53.9 58.0	27.0 29.0	15.3	4.0 4.8	12.7 15.9	14.3 19.1	26.4 32.2	15.2 20.3
8	1/8 1/4	57.7 59.7	30.0	16.2	4.0 5.9	14.3 15.9	14.3 19.1	28.4 32.3	15.2 20.3
10	1/4	67.0	33.5	17.2	5.9	20.6	19.1	35.1	20.3
12	3/8 1/2	72.0 76.1	36.1 38.1	22.8	7.9 9.5	20.6 23.8	22.2 27	37.1 43.4	24.4 29.5

Female Run Tee

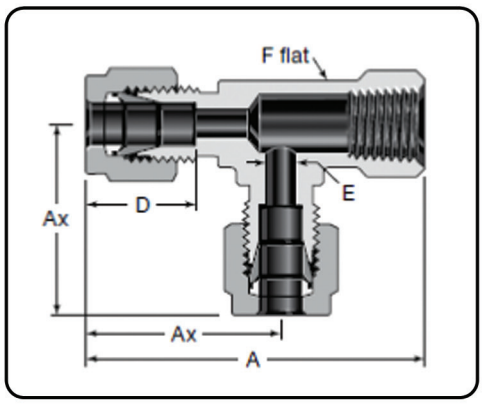

NPT

Tube OD in	NPT Size in.	Dimensions mm				
		A	Ax	D	E	F
1/8	1/8	43.70	24.60	12.70	2.30	12.7
1/4	1/8 1/4	46 52.1	26.9 29.7	15.20	4.80	12.7 17.5
3/8	1/4	53.60	31.20	16.80	7.10	17.5
1/2	3/8 1/2	58.4 68.3	36.1 39.9	22.90	10.40	20.6 27
3/4	3/4	76.50	44.70	24.40	15.70	34.9
1	3/4 1	80.8 91.7	49 53.6	31.20	22.40	34.9 42.9

Tube OD	NPT Size in.	Dimensions mm				
		A	Ax	D	E	F
6	1/8 1/4	46.0 52.1	27.0 29.8	15.3	4.8	12.7 17.5
8	1/8 1/4	48.9 53.0	29.9 30.6	16.2	6.4	15.9 17.5
10	1/4	55.9	33.5	17.2	7.9	20.6
12	1/4 3/8 1/2	58.4 58.4 68.3	36.0 36.0 39.8	22.8	9.5 10.3 9.5	20.6 20.6 27
16	1/2	68.2	39.8	24.4	12.7	27

Female Branch tee

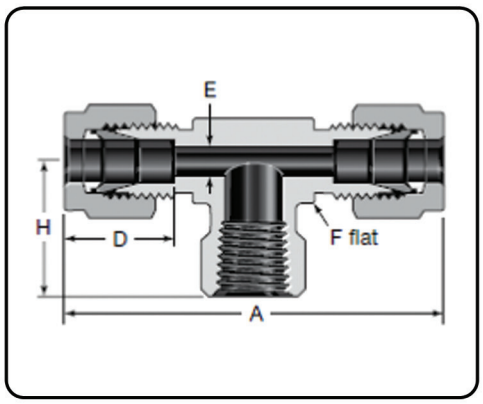

NPT

Tube OD in	NPT Size in.	Dimensions mm				
		A	D	E	F	H
1/8	1/8	49.30	12.70	2.30	12.7	19.10
1/4	1/8 1/4	53.8 59.4	15.20	4.80	12.7 17.5	19.1 22.1
3/8	1/4 3/8 1/2	62.5 66.5 72.1	16.80	7.10	17.5 20.6 25.4	22.4 22.4 28.4
1/2	1/4 3/8 1/2	72.1 72.1 77.7	22.90	10.40	20.6 20.6 25.4	22.4 22.4 28.4
5/8	1/2	77.70	24.40	12.70	25	28.40
3/4	3/4	89.40	24.40	15.70	34.9	31.80
1	3/4 1	98 107.2	31.20	22.40	34.9 42.9	31.8 38.1

Tube OD	NPT Size in.	Dimensions mm				
		A	D	E	F	H
6	1/8 1/4	53.9 59.5	15.3	4.8	12.7 17.5	19.0 22.4
8	1/8 1/4	59.7 61.2	16.2	6.4	15.9 17.5	19.0 22.4
10	1/4	67.0	17.2	7.9	20.6	22.4
12	1/4 3/8 1/2	72.0 72.0 77.7	22.8	9.5	20.6 20.6 25.4	22.4 22.4 28.4
16	1/2	77.6	24.4	12.7	25	28.4

Reducing Union Tee

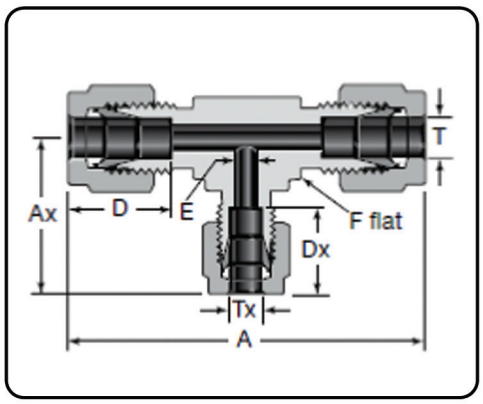

Tube OD in		Dimensions mm					
T	Tx	A	Ax	D	Dx	E	F
3/8	1/4	61.00	29.00	16.80	15.20	4.80	15.9
1/2	1/4 3/8	72.10	31.8 33.3	22.90	15.2 16.8	4.8 7.1	20.6
5/8	3/8	77.70	36.10	24.40	16.80	7.10	25
3/4	3/8 1/2	79.80	37.1 39.9	24.40	16.8 22.9	7.1 10.4	27
1	3/8 1/2 3/4	98.00	41.9 44.7 44.7	31.20	16.8 22.9 24.4	7.1 10.4 15.7	34.9
1 1/4	1	135.60	55.10	41.10	31.20	22.40	42.9
1 1/2	1	157.50	59.90	50.00	31.20	22.40	51
2	1	214.40	70.90	67.60	31.20	22.40	69.9

Tube OD		Dimensions mm					
T	Tx	A	Ax	D	Dx	E	F
3	6	49.3	26.9	12.9	15.3	2.4	12.7
8		59.9	29.0	16.2	15.3	4.8	15.9
10		63.0	29.7	17.2	15.3	4.8	17.5
12		72.0	31.8	22.8	15.3	4.8	20.6
15	12	77.7	38.9	24.4	22.8	9.5	25
16		77.6	38.9	24.4	22.8	9.5	25
18		79.8	39.9	24.4	22.8	9.5	27
22		89.4	44.7	26.0	22.8	9.5	34.9
25		98.0	44.7	31.3	22.8	9.5	34.9

Reducing Union Tee

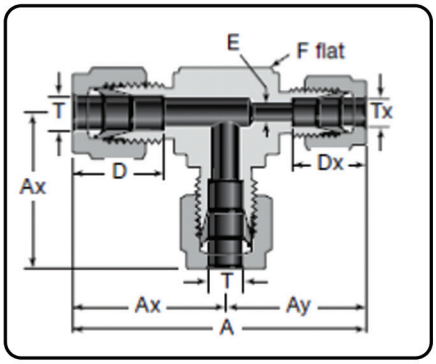

Tube OD in		Dimensions mm						
T	Tx	A	Ax	Ay	D	Dx	E	F
3/8	1/4	59.40	30.50	29.00	16.80	15.20	4.80	15.90

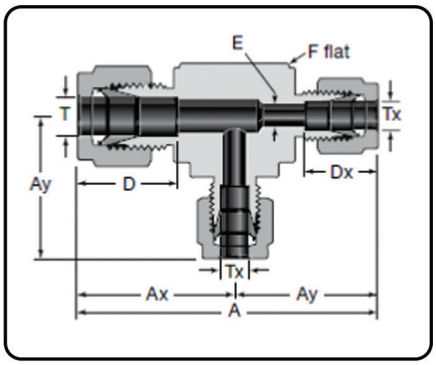

Tube OD in		Dimensions mm						
T	Tx	A	Ax	Ay	D	Dx	E	F
1/2	3/8	69.30	36.10	33.30	22.90	16.80	7.10	20.6
5/8		74.90	38.90	36.10	24.40	16.80	7.10	25
3/4		77.00	39.90	37.10	24.40	16.80	7.10	27

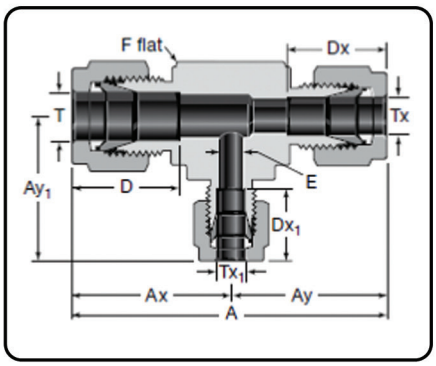

Tube OD in			Dimensions mm								
T	Tx	Tx_1	A	Ax	Ay	Ay_1	D	Dx	Dx_1	E	F
5/8	1/2	3/8	77.70	38.90	38.90	36.10	24.40	22.90	16.80	7.10	25
3/4	1/2		79.80	39.90	39.90	37.10	24.40	22.90			27
1	3/4		93.70	49.00	44.70	41.90	31.20	24.40			34.9

Male Branch Tee

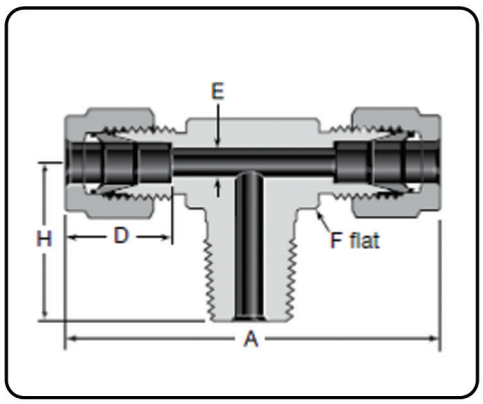

NPT

Tube OD in	NPT Size in.	Dimensions mm				
		A	D	E	F	H
1/8	1/8 1/4	47.2 49.3	12.70	2.30	11.1 12.7	17.8 23.4
3/16	1/8	48.80	13.70	3.00	11.1	17.80
1/4	1/8 1/4	53.80	15.20	4.80	12.7	18.8 23.4
5/16	1/8	59.40	16.30	4.80	15.9	20.80
3/8	1/4 3/8	61 66.5	16.80	7.10	15.9 20.6	25.4 28.2
1/2	3/8 1/2	72.10	22.90	9.7 10.4	20.6	28.2 33
5/8	1/2	77.70	24.40	11.90	25	35.80
3/4	3/4	79.80	24.40	15.70	27	36.80

Tube OD	NPT Size in.	Dimensions mm				
		A	D	E	F	H
6	1/8 1/4	53.9	15.3	4.8	12.7	18.8 23.4
8	1/8 1/4	59.7	16.2	4.8 6.4	15.9	20.8 25.4
10	1/4	67.0	17.2	7.1	20.6	26.2
12	3/8 1/4 1/2	72.0	22.8	9.5 7.1 9.5	20.6	28.2 28.2 33.0
16	1/2	77.6	24.4	11.9	25	35.8

Union

Union

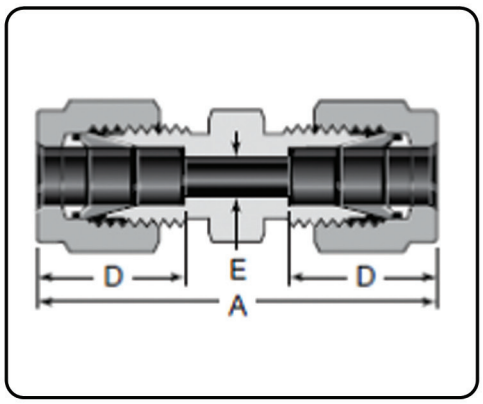

Tube OD in	Dimensions mm		
	A	D	E
1/16	25.10	8.60	1.30
1/8	35.60	12.70	2.30
3/16	37.30	13.70	3.00
1/4	40.90	15.20	4.80
5/16	42.90	16.30	6.40
3/8	45.00	16.80	7.10
1/2	51.30	22.90	10.40
1/2	109.20	—	12.70
5/8	52.10	24.40	
3/4	53.60		15.70
7/8	55.10	25.90	18.30
1	64.80	31.20	22.40
1 1/8			24.60
1 1/4	92.20	41.10	27.70
1 1/2	108.00	50.00	34.00
2	149.40	67.60	46.00

Tube OD	Dimensions mm		
	A	D	E
2	35.6	12.9	1.7
3	35.3		2.4
4	37.3	13.7	
6	41.0	15.3	4.8
8	43.2	16.2	6.4
10	46.2	17.2	7.9
12	51.2	22.8	9.5
14	52.0	24.4	11.1
15			11.9
16			12.7
18	53.5		15.1
20	55.0	26.0	15.9
22			18.3
25	65.0	31.3	21.8
28	85.0	36.6	
	65.4	31.6	24.6
30	92.7	39.6	26.2
32	97.3	42.0	28.6
38	114	49.4	33.7
50	146	65.0	45.2

Union

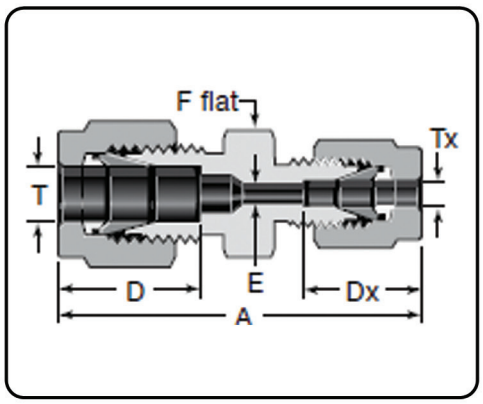

Tube OD		Dimensions mm				
T	Tx in	A	D	Dx	E	F
2	1/8 1/4	35.2 38.6	12.9	12.8 15.3	1.7	12 14
3	1/8	35.2	12.9	12.8	2.4	12
4	1/8 1/4	36.5 39.4	13.7	12.8 15.3	2.4	12 14
6	1/16 1/8 1/4 5/16 3/8	34.3 38.5 41.0 42.3 43.2	15.3	8.6 12.8 15.3 16.2 16.8	1.3 2.4 4.8 4.8 4.8	14 14 14 14 16
8	1/4 3/8	42.3 44.3	16.2	15.3 16.9	4.8 6.4	15 16
10	1/8 1/4 5/16 3/8	41.8 44.5 45.1 45.9	17.2	12.8 15.3 16.2 16.9	2.4 4.8 6.4 7.1	18
12	1/4 5/16 3/8 1/2	47.0 47.8 48.4 51.2	22.8	15.3 16.2 16.9 22.9	4.8 6.4 7.1 9.5	22
14	1/2	52.0	24.4	22.9	10.3	24
15	1/2	52.0	24.4	22.9	10.3	24
16	5/8	52.0	24.4	24.4	12.7	24
18	3/4	53.5	24.4	24.4	15.1	27
20	1/2 1	55.0 62.8	26.0	22.9 31.3	10.3 15.9	30 35
25	1	65.0	31.3	31.3	21.8	35

Union

Reducing Union

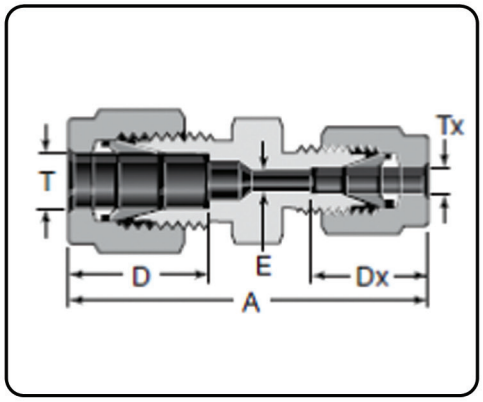

Tube OD in		Dimensions mm			
T	Tx	A	D	Dx	E
1/8	1/16	31.00	12.70	8.60	1.30
3/16	1/16	32.3	13.70	8.6	1.3
	1/8	36.6		12.7	2.3
1/4	1/16	34.3	15.20	8.6	1.3
	1/8	38.6		12.7	2.3
	3/16	39.4		13.7	3
5/16	1/8	39.6	16.30	12.7	2.3
	1/4	42.2		15.2	4.8
3/8	1/16	36.6	16.80	8.6	1.3
	1/8	40.9		12.7	2.3
	1/4	43.2		15.2	4.8
	5/16	44.2		16.3	6.4
1/2	1/8	45.2	22.90	12.7	2.3
	1/4	47		15.2	4.8
	3/8	48.5		16.8	7.1
5/8	3/8	49.3	24.40	16.8	7.1
	1/2	52.1		22.9	10.4
3/4	1/4	49.3	24.40	15.2	4.8
	3/8	50.8		16.8	7.1
	1/2	53.6		22.9	10.4
	5/8	53.6		24.4	12.7
1	1/2	60.50	31.20	22.9	10.4
	3/4			24.4	15.7

Tube OD		Dimensions mm			
T	Tx	A	D	Dx	E
3	2	35.3	12.9	12.9	1.7
6	2	38.6	15.3	12.9	1.7
	3	38.6		12.9	2.4
	4	39.4		13.7	2.4
8	6	42.3	16.2	15.3	4.8
10	6	44.5	17.2	15.3	4.8
	8	45.1		16.2	6.4
12	6	47.0	22.8	15.3	4.8
	8	47.8		16.2	6.4
	10	48.7		17.2	7.9
14	12	48.8	24.4	22.8	6.4
15	12	48.8	24.4	22.8	6.4
16	10	49.5	24.4	17.2	7.9
	12	52.0		22.8	9.5
18	12	53.5	24.4	22.8	9.5
25	18	61.0	31.3	24.4	15.1
	20	62.3		26.0	15.9
30	18	75.4	39.6	24.4	15.1
	20	75.4		26.0	15.9
	25	80.1		31.3	21.8
32	18	77.8	42.0	24.4	15.1
	20	77.8		26.0	15.9
	25	82.3		31.3	21.8
38	20	87.5	49.4	26.0	15.9
	25	92.0		31.3	21.8
	30	105		39.6	26.2

Union

Bulkhead Union

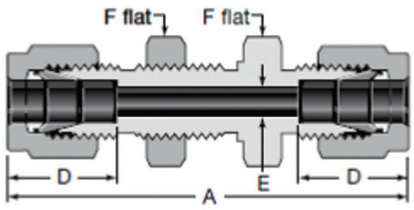

Tube OD in	Dimensions mm					
	A	D	E	F	Panel Hole Size	Max Panel Thickness
1/16	31.50	8.60	1.30	7.9	5.2	3
1/8	51.30	12.70	2.30	12.7	8.3	12.70
3/16	53.60	13.70	3.00	14.3	9.9	
1/4	57.70	15.20	4.80	15.9	11.5	10.20
5/16	60.70	16.30	6.40	17.5	13.1	11.20
3/8	62.20	16.80	7.10	19.1	14.7	
1/2	71.10	22.90	10.40	23.8	19.4	12.70
5/8	72.60	24.40	12.70	27	22.6	
3/4	79.00	24.40	15.70	30.2	25.8	16.80
1	95.80	31.20	22.40	41.3	33.7	19.10
1 1/4	123.20	41.10	27.70	47.6	41.7	
1 1/2	139.20	50.00	34.00	57.2	49.6	
2	180.30	67.60	46.00	69.9	67.1	

Tube OD	Dimensions mm					
	A	D	E	F	Panel Hole Size	Max Panel Thickness
3	51.3	12.9	2.4	14	8.3	12.7
4	53.6	13.7	2.4		9.9	
6	57.7	15.3	4.8	16	11.5	10.2
8	61.0	16.2	6.4	18	13.1	11.2
10	63.7	17.2	7.9	22	16.3	
12	71.0	22.8	9.5	24	19.5	12.7
14	72.5	24.4	11.1	27	22.5	
15	72.5	24.4	11.9		22.8	
16	72.5	24.4	12.7			
18	78.9	24.4	15.1	30	26.0	16.8
20	84.5	26.0	15.9	35	29.0	19.0
25	96.0	31.3	21.8	41	34.0	
30	124	39.6	26.2	50	40.5	
32	128	42.0	28.6		42.5	
38	145	49.4	33.7	60	50.5	

Union Cross

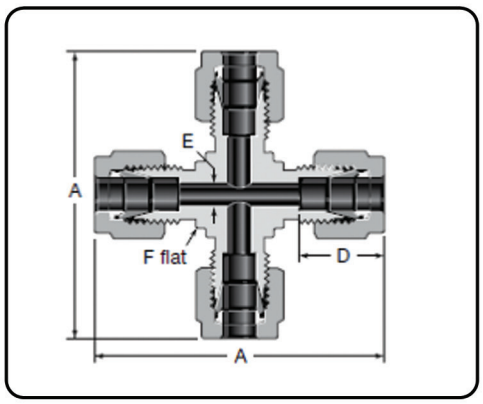

Tube OD in	Dimensions mm			
	A	D	E	F
1/8	44.70	12.70	2.30	9.5
1/4	53.80	15.20	4.80	12.7
5/16	59.40	16.30	6.40	15.9
3/8	61.00	16.80	7.10	15.9
1/2	72.10	22.90	10.40	20.6
3/4	79.80	24.40	15.70	27
1	98.00	31.20	22.40	34.9

Tube OD	Dimensions mm			
	A	D	E	F
3	44.7	12.9	2.4	9.5
6	53.9	15.3	4.8	12.7
8	59.7	16.2	6.4	15.9
10	67.0	17.2	7.9	20.6
12	72.0	22.8	9.5	20.6
16	74.0	24.4	12.7	23.8
18	76.6	24.4	15.1	27
20	89.3	26.0	15.9	34.9
22	89.4	26.0	18.3	15.9
25	98.3	31.3	21.8	34.9

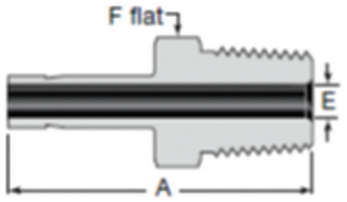

1 in./25 mm and under

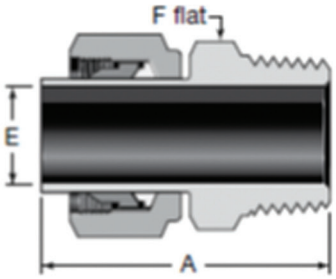

Over 1 in./25 mm

NPT

Tube OD in	NPT Size in.	Dimensions mm		
		A	R	F
1/8	1/8	29.5	2.00	11.1
	1/4	34.8		14.3
3/16	1/8	30.2	3.00	11.1
	1/4	3.6		14.3
1/4	1/8	31.8	4.30	11.1
	1/4	37.1		14.3
	3/8	37.8		17.5
	1/2	43.4		22.2
5/16	1/8	32.8	4.8	11.1
	1/4	38.1	5.6	14.3
3/8	1/8	33.5	4.8	11.1
	1/4	38.9	6.9	14.3
	3/8	39.6	6.9	17.5
	1/2	45.2	6.9	22.2
1/2	1/4	44.5	7.1	14.3
	3/8	45.2	9.4	17.5
	1/2	50.8	9.4	22.2
5/8	1/2	52.30	11.90	22.2
3/4	1/2	52.30	11.9	22.2
	3/4		14.7	27
1	3/4	58.7	15.7	27
	1	66	20.3	34.9
1 1/4	1 1/4	80.30	25.90	44.5
1 1/2	1 1/2	94.50	31.80	54
2	2	119.40	43.70	69.9

Tube OD	NPT Size in.	Dimensions mm		
		A	R	F
6	1/8	32.8	4.1	12
	1/4	38.1		14
8	1/4	39.1	5.6	14
	3/8	39.9		19
10	1/4	39.9	7.1	14
	3/8	40.6		18
	1/2	46.2		22
12	1/4	46.5	7.1	16
	1/2	52.1	8.8	22
28	1	74.7	22.2	35
	1 1/4	76.2	22.5	46
	1	68.6	22.2	35
	1 1/4	70.1	22.6	45
30	1	79.2	22.2	41
	1 1/4	80.0	24.3	46
32	1 1/4	81.0	26.5	46
38	1 1/2	92.2	31.6	55

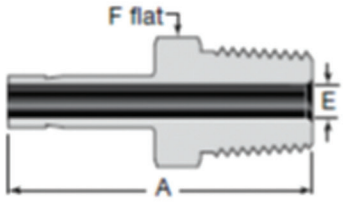

1 in./25 mm and under

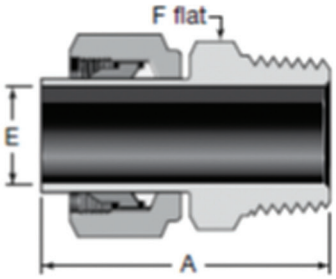

Over 1 in./25 mm

BSPT (RT)

Tube OD in	ISO Thread Size in.	Dimensions mm		
		A	E	F
1/8	1/8	29.5	2.00	11.1
	1/4	34.8		14.3
1/4	1/8	31.8	4.30	11.1
	1/4	37.1		14.3
3/8	1/4	38.9	6.90	14.3
	3/8	39.6		17.5
	1/2	45.2		22.2
1/2	1/4	44.5	7.1	14.3
	3/8	45.2	9.4	17.5
	1/2	50.8	9.4	22.2
3/4	3/4	52.30	14.70	27
1	1	66.00	20.30	34.9

Tube OD	ISO Thread Size in.	Dimensions mm		
		A	E	F
6	1/8	32.8	4.1	12
	1/4	38.1		14
8	1/4	39.1	5.6	14
10	1/4	39.9	7.1	14
	3/8	40.6		18
12	1/4	46.5	7.1	16
	3/8	46.2	8.8	18
	1/2	51.8	8.8	22
28	1	74.7	22.2	35
	1 1/4	76.2	22.5	46
	1	68.6	22.2	35
	1 1/4	70.1	22.6	45
30	1 1/4	80.0	24.3	46
32	1 1/4	81.0	26.5	46
38	1 1/2	92.2	31.6	55

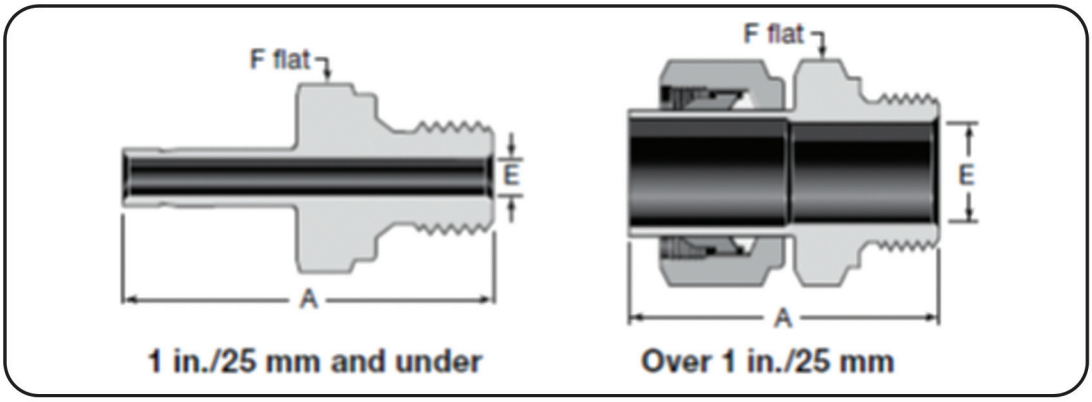

BSPP (RS)

Tube OD in	ISO Thread Size in.	Dimensions mm		
		A	E	F
1/8	1/8	31.8	2.00	14.3
	1/4	36.3		19.1
1/4	1/8	34.3	4.1	14.3
	1/4	38.9	4.3	19.1
3/8	1/4	40.4	5.8	19.1
	3/8	41.4	6.9	22.2
1/2	1/4	47	5.8	19.1
	3/8	47.8	7.9	22.2
	1/2	49.8	9.4	27
3/4	3/4	55.90	14.70	33.3
1	1	65.80	20.30	41.3

Tube OD	ISO Thread Size in.	Dimensions mm		
		A	E	F
6	1/8	34.3	4.0	14
	1/4	38.9	4.1	19
8	1/4	39.6	5.6	19
10	1/4	40.4	5.9	19
	3/8	41.1	7.1	22
	1/2	43.2	7.1	27
12	1/4	47.0	5.9	19
	3/8	47.8	7.9	22
	1/2	49.8	8.8	27
18	1/2	51.3	11.9	27
	3/4	55.9	13.9	35
28	1	71.9	19.8	41
	1 1/4	75.4	22.5	50
	1	65.8	19.8	41
	1 1/4	69.3	22.6	50
30	1 1/4	79.8	24.3	50
32	1 1/4	80.8	26.5	50
38	1 1/2	91.9	31.6	55

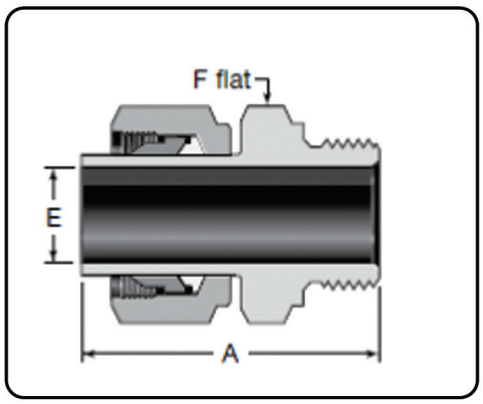

BSPP (RP)

Tube OD	ISO Thread Size in.	Dimensions mm		
		A	E	F
28	1	72.7	19.8	41
	1 1/4	77.3	22.5	50
	1	65.8	19.8	41
	1 1/4	71.1	22.6	50
30	1 1/4	81.1	24.3	50
32	1 1/4	82.1	26.5	50
38	1 1/2	94.5	31.8	55

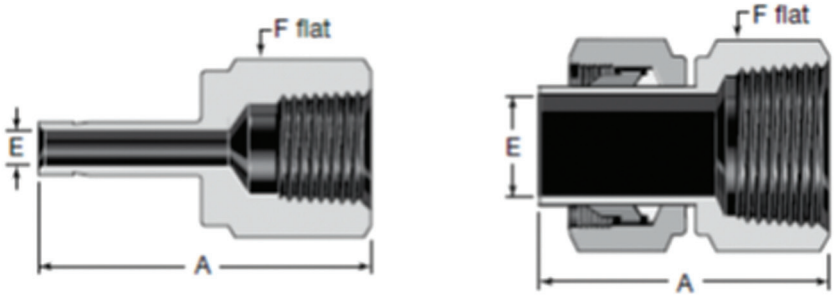

1 in./25 mm and under | Over 1 in./25 mm

NPT

Tube OD in	NPT Size in.	Dimensions mm		
		A	E	F
1/8	1/8 1/4	31.5 35.3	2.00	14.3 19.1
3/16	1/4	35.80	3.00	19.1
1/4	1/8 1/4 3/8 1/2	33 37.1 39.4 45.5	4.30	14.3 19.1 22.2 27
5/16	1/4	37.60	5.60	19.1
3/8	1/8 1/4 3/8 1/2	34.3 38.1 40.4 46.7	6.90	14.3 19.1 22.2 27
1/2	1/4 3/8 1/2	43.4 45.5 52.1	9.40	19.1 22.2 27
5/8	1/2	53.10	11.90	27
3/4	1/2 3/4 1	52.8 54.9 58.4	14.70	27 33.3 41.3
1	3/4 1	60.7 64.3	20.30	33.3 41.3
1 1/4	1 1/4	77.70	25.90	54
1 1/2	1 1/2	88.90	31.80	60.3
2	2	107.40	43.70	73

Tube OD	NPT Size in.	Dimensions mm		
		A	E	F
6	1/8 1/4	32.5 37.1	4.1	14 19
8	1/4	37.6	5.6	19
10	1/4 3/8 1/2	38.1 40.1 46.7	7.1	19 22 27
12	1/4 1/2	43.7 52.3	8.8	19 27

BSPT (RT)

Tube OD in	ISO Thread Size in.	Dimensions mm		
		A	E	F
1/4	1/8 1/4	33 36.8	4.30	14.3 19.1
3/8	1/4 3/8	38.1 40.4	6.90	19.1 22.2
1/2	1/4 3/8 1/2	43.4 45.7 52.1	9.40	19.1 22.2 27

Tube OD	ISO Thread Size in.	Dimensions mm		
		A	E	F
6	1/8	33.0	4.1	14
8	1/4	37.6	5.6	19
10	1/4	38.1	7.1	19

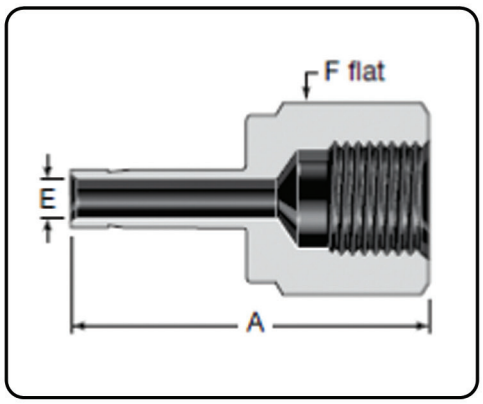

BSPP (RP)

Tube OD in	ISO Thread Size in.	Dimensions mm		
		A	E	F
1/8	1/8	29.70	2.00	14.3
1/4	1/8 1/4	31.8 38.1	4.30	14.3 19.1
3/8	1/4 3/8	39.4 39.9	6.90	19.1 23.8
1/2	3/8 1/2	45.2 51.3	9.70	23.8 27

Tube OD	ISO Thread Size in.	Dimensions mm		
		A	E	F
6	1/8 1/4	32.0 37.8	4.1	14 19
12	1/2	49.8	8.8	27

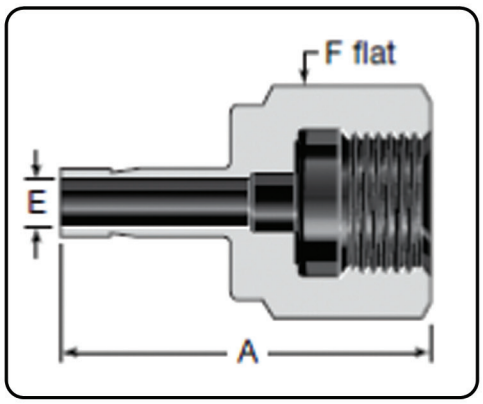

BSPP (RJ)

Tube OD in	ISO Thread Size in.	Dimensions mm		
		A	E	F
1/4	1/4	35.30	4.30	19.1
3/8	3/8	39.40	6.60	23.8
1/2	1/2	49.30	7.10	27

Tube OD	ISO Thread Size in.	Dimensions mm		
		A	E	F
6	1/4	35.3	4.1	19
	3/8	38.6		24
	1/2	42.9		27
8	1/4	33.0	5.5	19
	3/8	39.4	5.6	24
	1/2	43.7	5.6	27
10	1/4	34.5	5.5	19
	3/8	36.1	6.5	24
	1/2	41.1	7.1	27
12	1/4	40.1	5.5	19
	3/8	44.7	6.5	24
	1/2	48.8	7.0	27

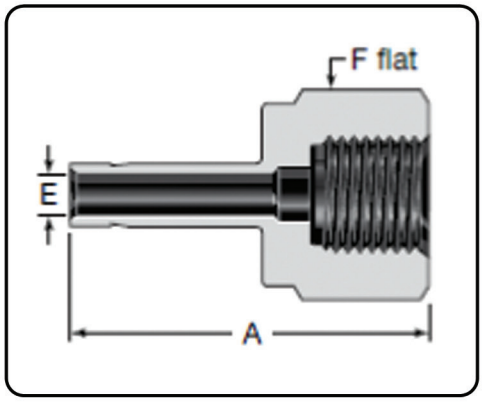

BSPP (RG)

Tube OD in	ISO Thread Size in.	Dimensions mm		
		A	E	F
1/4	1/4	35.30	4.30	19.1
3/8	3/8	39.40	6.60	23.8
1/2	1/2	45.70	7.10	27

Tube OD	ISO Thread Size in.	Dimensions mm		
		A	E	F
6	1/4	35.3	4.1	19
	3/8	38.4		24
	1/2	42.9		27
8	1/4	33.0	5.5	19
	3/8	38.9	5.6	24
	1/2	43.7	5.6	27
10	1/4	34.5	5.5	19
	3/8	36.1	6.5	24
	1/2	41.1	7.1	27
12	1/4	40.1	5.5	19
	3/8	44.7	6.5	24
	1/2	48.8	7.0	27
16	1/2	49.0	7.0	27
18	1/2	49.3	7.0	27

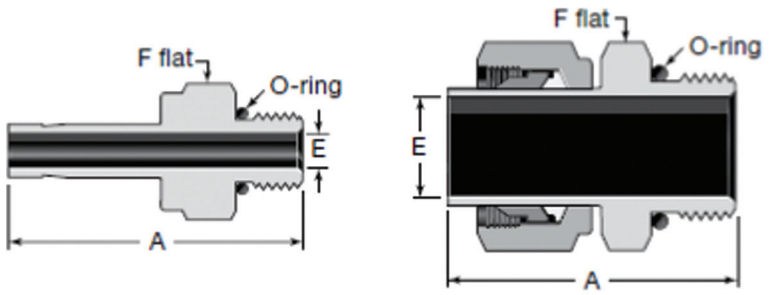

1 in./25 mm and under

Over 1 in./25 mm

STRAIGHT THREAD (ST)

Tube OD in	SAE/MS Thread Size	Dimensions mm		
		A	E	F
1/8	5/16-24	30.50	2.00	11.1
1/4	7/16-20	35.30	4.30	14.3
3/8	7/16-20 9/16-18 3/4-16	37.1 38.6 40.6	5.1 6.9 6.9	14.3 17.5 22.2
1/2	9/16-18 3/4-16	44.2 46.2	7.1 9.4	17.5 22.2
5/8	7/8-14	49.30	11.90	25
3/4	1 1/16-12	53.30	14.70	31.8
1	1 5/16-12	61.20	20.30	38.1
1 1/4	1 5/8-12	71.40	25.90	47.6
1 1/2	1 7/8-12	83.30	31.80	54
2	2 1/2-12	107.40	43.70	69.9

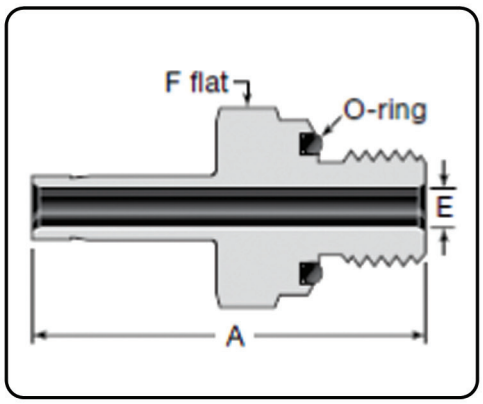

STRAIGHT THREAD

Tube OD in.	SAE/MS Thread Size	Dimensions mm		
		A	E	F
1/8	5/16-24	32.50	2.00	14.3
3/16	3/8-24	35.10	3.00	15.9
1/4	7/16-20	39.10	4.30	19.1
5/16	1/2-20	41.70	5.60	22.2
3/8	9/16-18	43.20	6.90	23.8
1/2	3/4-16	49.50	9.40	28.6

FRONT FERRULE

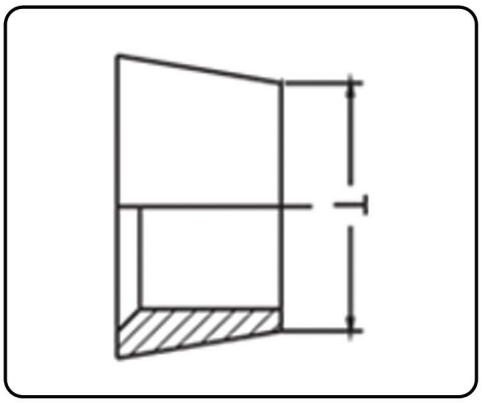

Tube OD (T) Available sizes																
Inch	1/16	1/8	1/4	5/16	3/8	1/2	5/8	3/4	7/8	1	1 1/4	1 1/2	2	-	-	-
Metric	4	6	8	10	12	14	15	16	18	20	22	25	28	30	32	38

BACK FERRULE

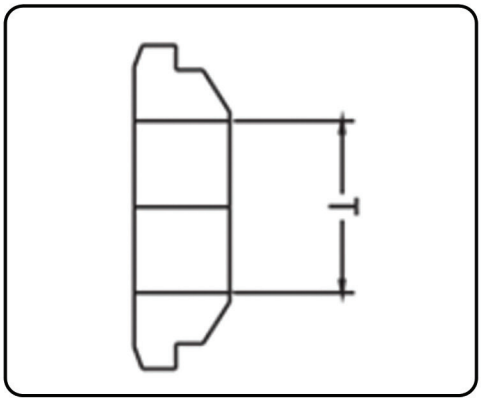

Tube OD (T) Available sizes																
Inch	1/16	1/8	1/4	5/16	3/8	1/2	5/8	3/4	7/8	1	1 1/4	1 1/2	2	-	-	-
Metric	3	6	8	10	12	14	15	16	18	20	22	25	28	30	32	38

COUPLING CAP

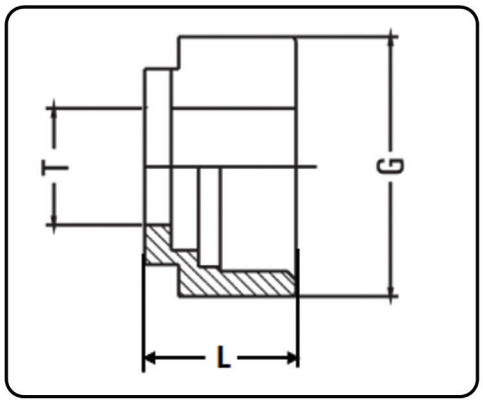

Dimensions mm																	
Inch	T	1/16	1/8	1/4	5/16	3/8	1/2	5/8	3/4	7/8	1	1 1/4	1 1/2	2	-	-	-
	L	8	12	12.7	14	14.5	17.5	17.5	17.5	17.5	20.6	31.8	38	52.5	-	-	-
	G A/F	8	11	14	16	17	22	25	28.5	32	38	50	57	76	-	-	-
Metric	T	3	6	8	10	12	14	15	16	18	20	22	25	28	30	32	38
	L	12	12.7	13.5	15.1	17.5	17.5	17.5	17.5	17.5	17.5	17.5	20.6	30.6	33	32	38.1
	G A/F	11	14	16	22	22	25	25	25	30	32	32	38	46	50	50	57

FITTING END CLOSURE

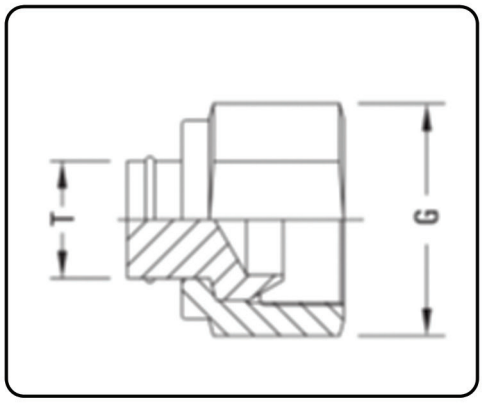

Dimensions mm																	
Inch	T	1/16	1/8	1/4	5/16	3/8	1/2	5/8	3/4	7/8	1	1 1/4	1 1/2	2	-	-	-
	G A/F	8	11	14	16	17	22	25	28.5	32	38	50	57	76	-	-	-
Metric	T	3	6	8	10	12	14	15	16	18	20	22	25	28	30	32	38
	G A/F	11	14	16	19	22	25	25	25	30	32	32	38	46	50	50	57

Tube Cap

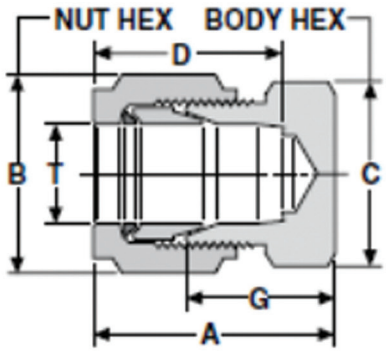

Tube OD in.	Dimensions mm				
	A	B	C	D	G
1/16	16.80	7.90	7.90	10.40	11.20
1/8	23.10	11.10	11.10	14.20	13.50
3/16	22.60	12.70	11.10	15.00	14.70
1/4	24.10	14.30	12.70	16.30	16.00
3/8	26.90	17.50	15.90	18.30	18.30
1/2	32.50	22.20	20.60	24.60	20.60
5/8	33.80	25.40	23.80	25.40	22.60
3/7	34.50	28.60	27.00	25.40	23.40
7/8	35.80	31.80	30.20	26.90	24.60
1	45.00	38.10	34.90	33.30	30.50
1 1/4	53.30	47.60	36.30	38.90	31.20
1 1/2	64.50	57.20	54.00	45.20	37.30
2	86.60	76.20	69.90	62.70	49.30

Tube OD	Dimensions mm				
	A	B	C	D	G
3	22.80	11.10	11.10	14.30	14.80
4	23.60	12.70	11.10	15.10	15.80
6	25.30	14.30	12.70	16.30	16.90
8	25.10	159.00	14.30	16.70	17.10
10	26.20	19.10	17.50	17.50	18.30
12	32.60	22.20	20.60	24.60	20.60
14	31.60	23.80	22.20	22.20	22.20
15	31.90	23.80	22.20	22.20	21.50
16	35.00	25.40	23.80	25.00	23.90
18	33.40	28.60	27.00	25.40	23.40
20	40.00	31.80	30.20	31.00	25.20
22	35.80	31.80	30.20	27.00	24.60
25	45.90	38.10	349.00	33.30	31.50
30	53.40	50.80	46.00	39.60	31.80
32	55.80	50.80	46.00	42.00	32.80
36	65.40	60.30	55.00	49.40	37.80

Tube Plug

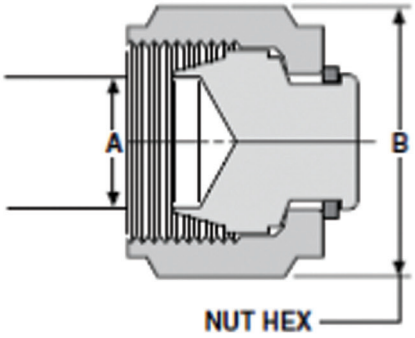

Dimensions mm																	
Inch	A	1/16	1/8	3/16	1/4	3/8	1/2	5/8	3/4	7/8	1	1 1/4	1 1/2	2	-	-	-
	B	7.9	11.1	12.7	14.3	17.5	22.2	25.4	28.6	31.8	38.1	47.6	57.2	76.2	-	-	-
Metric	A	3	4	6	8	10	12	14	15	16	18	20	22	25	30	32	38
	B	11.1	12.7	14.6	15.9	19.1	22.2	23.8	23.8	25.4	28.6	31.8	31.8	38.1	50.8	50.8	60.3

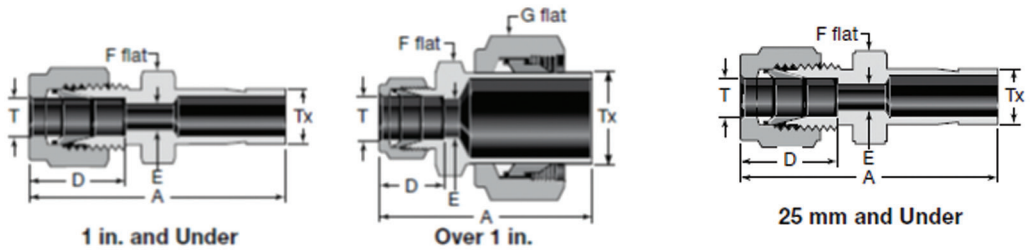

FRACTIONAL

Tube OD in.		Dimensions mm				
T	Tx	A	D	E	F	G
1/16	1/8 1/4	29.2 31.5	8.60	1.30	7.9	—
1/8	1/16 1/8 3/16 1/4 3/8 1/2	29 33.5 34.3 36.1 37.6 44.2	12.70	0.8 2 2.3 2.3 2.3 2.3	11.1 11.1 11.1 11.1 14.3	—
3/16	1/8 1/4	34.8 37.1	13.70	2 3	11.1	—
1/4	1/8 3/16 1/4 5/16 3/8 1/2 5/8 3/4	36.8 37.6 39.1 39.9 40.6 46.2 48 47.8	15.20	2 3 4.3 4.8 4.8 4.8 4.8 4.8	12.7 12.7 12.7 12.7 14.3 17.5 20.6	—
5/16	3/8 1/2	41.9 47.5	16.30	6.40	14.3	—
3/8	1/4 3/8 1/2 5/8 3/4	41.4 43.2 48.5 50.3 50.3	16.80	4.3 6.9 7.1 7.1 7.1	15.9 15.9 15.9 17.5 20.6	—
1/2	1/4 3/8 1/2 5/8 3/4 1	45 46.7 52.3 53.8 53.8 60.2	22.90	4.3 6.9 9.4 10.4 10.4 10.4	20.6 20.6 20.6 20.6 20.6 27	—
5/8	3/4 7/8 1	54.6 56.1 61	24.40	12.70	23.8 23.8 27	—
3/4	1/2 1	54.6 62.5	24.40	9.4 15.7	27	—
1	1 1/4 1 1/2 2	80.5 89.2 112.5	31.20	22.40	34.9 41.3 54	47.6 57.2 76.2
1 1/4	1 1/2 2	104.1 125.2	41.10	27.70	44.5 54	57.2 76.2
1 1/2	2	131.30	50.00	34.00	54	76

METRIC

Tube OD		Dimensions mm			
T	Tx	A	D	E	F
2	3	33.5	12.9	1.7	12
3	4 6 10	35 36.1 38.4	12.9	2.4	12 12 14
4	6	37.1	13.7	2.4	12
6	3 8 10 12 18	36.9 39.9 40.7 46.3 49.6	15.3	1.9 4.8 4.8 4.8 4.8	14 14 14 14 22
8	6 10 12	40.3 42.0 47.6		4.1 6.4 6.4	15
10	6 8 12 15 18	42.4 43.4 49.8 51.3 51.3	17.2	4.1 5.6 7.9 7.9 7.9	18 18 18 18 22
12	6 8 10 16 18 20 22 25	44.9 45.9 46.7 53.8 53.8 56.1 56.1 62.4	22.8	4.1 5.6 7.1 9.5 9.5 9.5 9.5 9.5	22 22 22 22 22 22 24 27
14	12	53.0	24.4	8.8	24
15	12	53.0	24.4	8.8	24
16	12	53.0	24.4	8.8	24
18	12 16 20 22 25	54.6 56.1 57.6 57.6 62.4	24.4	8.8 12.0 15.1 15.1 15.1	27
22	18 20 25	57.9 59.4 64.2		13.9 15.5 18.3	30
25	18 20	63.1 64.6	31.3	13.9 15.5	35

METRIC TO FRACTION

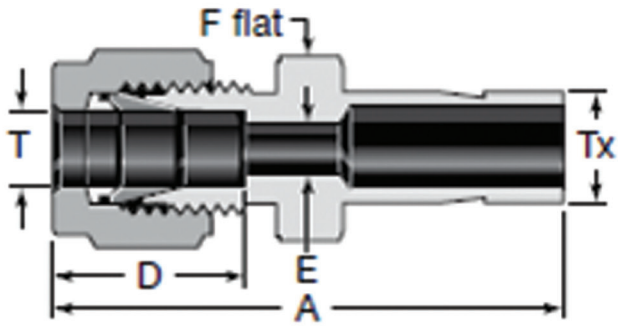

FRACTION TO METRIC

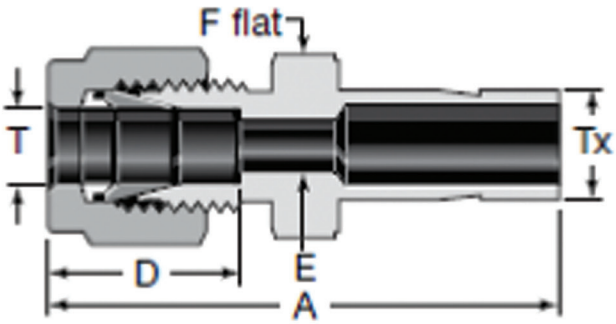

Tube OD		Dimensions mm			
T	Tx in	A	D	E	F
2	1/8	33.5	12.9	1.7	12
3	1/8 1/4	33.5 36.1	12.9	2 2.4	12
4	1/4	37.1	13.7	2.4	12
6	1/8 1/4 5/16 3/8 1/2	36.9 39.2 39.9 40.7 46.3	15.3	2.0 4.4 4.8 4.8 4.8	14
8	1/4 3/8 1/2	40.3 42.0 47.6	16.2	4.4 6.4 6.4	15
10	3/8 1/2	44.2 49.8	17.2	6.8 7.9	18
12	1/2 3/4	52.3 53.8	22.8	9.3 9.5	22
18	3/4 1	56.1 62.4	24.4	14.7 15.1	27
25	1	69.5	31.3	20.2	35

Tube OD		Dimensions mm			
T, in.	Tx	A	D	E	F
1/8	6	36.10	12.70	2.30	11.10

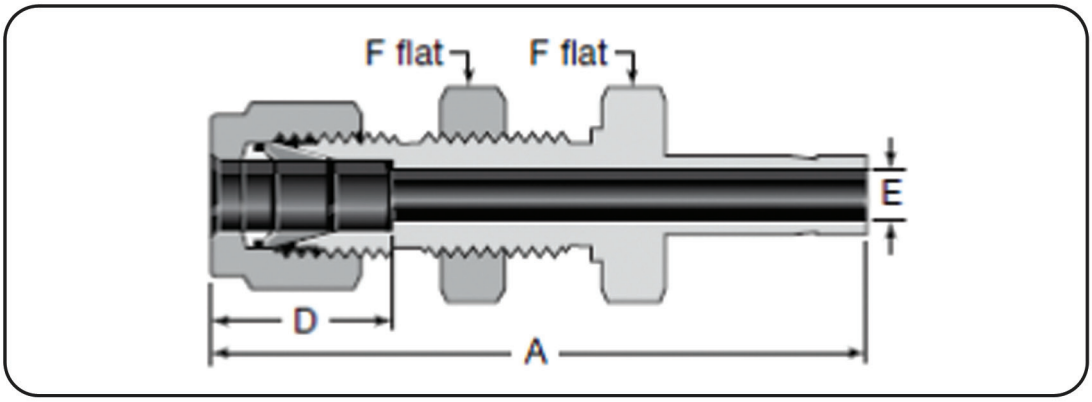

BULKHEAD REDUCER

Tube OD in.	Dimensions mm					
	A	D	E	F	Panel Hole Size	Max Panel Thickness
1/8	49.50	12.70	2.00	12.70	8.30	12.70
1/4	55.90	15.20	4.30	15.90	11.50	10.20
3/8	61.20	16.80	6.90	19.10	14.70	11.20
1/2	72.90	22.90	9.40	23.80	19.40	12.70
5/8	75.20	24.40	11.90	27.00	22.60	12.70
3/4	81.50	24.40	14.70	30.20	25.80	16.80
1	100.30	31.20	20.30	41.30	33.70	19.10

Product Range Industrial Valves

We are also a leading manufacturer of Industrial Valves. A short list of our products are as below :

Valve Type	Design Standard	150 #	300 #	600 #	800 #	900 #	1500 #	2500 #
Ball Valve - Trunnion	API 6D, ISO 17292	2" to 48"	2" to 48"	2" to 48"	-	2" to 24"	2" to 24"	2" to 12"
Ball Valves - Floating	API 6D, ISO 17292	½" to 6"	½" to 6"	½" to 6"	½" to 2"	½" to 2"	½" to 2"	½" to 2"
Forged GGC Valve	ASME B16.34, API 602	½" to 2"	½" to 2"	½" to 2"	½" to 2"	½" to 2"	½" to 2"	½" to 2"
Gate Valve	API 600, API 6D	2" to 36"	2" to 36"	2" to 36"	-	2" to 24"	2" to 24"	2" to 12"
Globe Valve	API 623, BS 1873	2" to 16"	2" to 16"	2" to 16"	-	2" to 12"	2" to 12"	2" to 12"
Swing Check Valve	API 594, BS 1868	2" to 24"	2" to 24"	2" to 24"	-	2" to 12"	2" to 12"	2" to 12"
Dual Plate Check Valve	API 594	2" to 48"	2" to 24"	2" to 20"	-	2" to 16"	2" to 12"	-
Butterfly Valve	API 609	2" to 36"	2" to 36"	2" to 36"	-	2" to 24"	2" to 16"	-
Plug Valve	API 599, API D	2" to 24"	2" to 24"	2" to 16"	-	-	-	-
Piston Valve	ASME B16.34, API 602	½" to 8"	½" to 8"	-	½" to 2"	-	-	-
Knife Edge Gate Valve	ASME 16.34, MSS SP 81	2" to 48"	2" to 24"	-	-	-	-	-
Strainer	ASME 16.34	1" to 12"	1" to 6"	-	-	-	-	-

* For valves of sizes and pressure class other than shown in table, Please contact our sales representative.

Spare & Part Supplier

We are supplying spares of valve, actuator and accessories to suit all types of valves and valve make.

With over 20 years of experience in valve industry, we can offer the world class quality, best prices and fastest delivery. We work to give you a quick response with technical & commercial inputs to provide you with the best solutions.

The spares & parts offered by us, are categorized as below :

Machined Parts | Castings / Forgings | Seals | Fasteners | Actuator & Accessories

MACHINED PARTS :

- We supply all kinds of machined parts for any type of valve.
- Body / Trims / Bonnet / Stem / Flanges / Mountings etc.

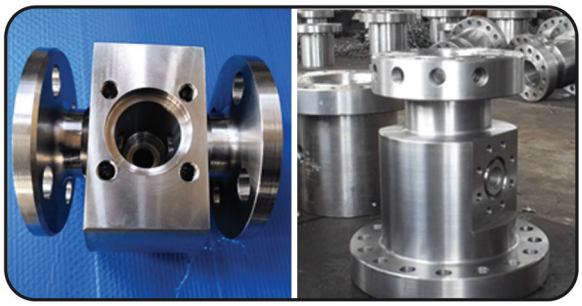

CASTINGS / FORGINGS :

- We supply all kinds of castings and forgings for any type of valve.
- Castings : Sand Casting / Investment Casting / Lost Foam Casting.
- Forgings : Close Die / Open Die Forging.

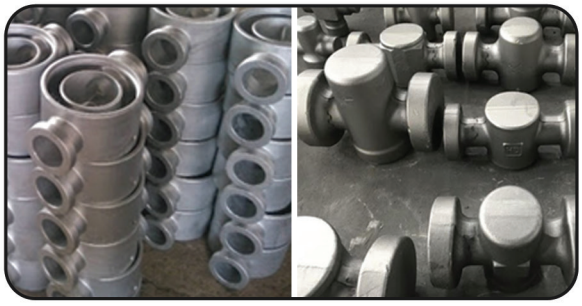

SEALS :

- We supply all types of seals for valves.
- O-Rings / Gaskets / Packings / Lipseals etc.

FASTENERS :

- We supply all types of fasteners for valves in all sizes.
- Stud / Bolt / Nut / Screws / Coated Fasteners etc

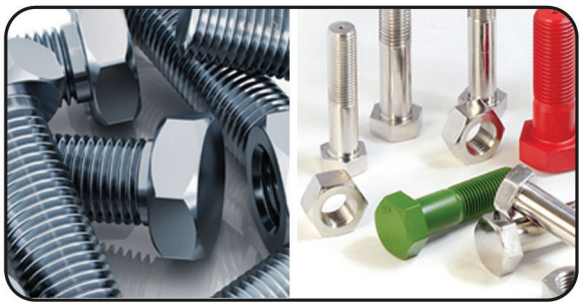

ACTUATOR & ACCESSORIES :

Refurbishment & Repair of Valves

We have vast experience in refurbishing & repairing of all types of industrial valves from every industry such as Oil & Gas, Refinery, Petrochemical, Chemical Process and other similar installations.

All valves and its parts are inspected at our workshops before we start our work. A complete inspection report along with actual photos is prepared for initial assessment of cost, repairing and time period.

All repairing and reconditioning is carried out as per the initial assessment report and its solutions in a control way.

We can repair most valve make, types, sizes and different rating using our highly skilled Engineers and Technicians.

By Repairing, we can save up to 60% to 70% of the cost of a new valve and delivery can be done within 10 – 15 days or as per agreement. Thereby, it can ideal during plant shutdown and maintenance.

All Valves are disassembled, cleaned and inspected to check whether they are in tolerance so that It can be used in the valve again. However, if it is not then, we can replace the component with a new one. 3D Models / 2D drawings are prepared for the same.

Flange serration are check and inspected for any damage and repair or machining is done, if required. Wedge / Seat / Disc / Ball are machined (if required) and then lapped to ensure a perfect seal as per the customer leakage requirements. All soft parts such as packing and gaskets are replaced with new parts so that leakage is not there.

Valves are assembled by highly trained technicians. Hydro testing is done to check body leakage and seat leakage test is done to check for any internal leakage as per international standards or as per customer requirements. Painting can be provided as per customer requirements.

Testing report is generated with all the details along with satisfactory test results. Our Quality engineer puts his sign and stamp of the company as approval.

Application in Industries

Our valves are used by various industries worldwide to keep their operating facility running smoothly.

OIL & GAS

REFINERY & PETROCHEMICAL

PIPELINE & PROCESS

OFFSHORE

POWER

LNG & CRYOGENICS

PULP & PAPER

PHARMACEUTICAL

FOOD & BEVERAGE

WATER & WASTE WATER

MINING

MARINE

MAffS
Valves & Fittings

Follow us at :

For more details, Contact at :

+91 9930568025
sales@maffsvalves.com
www.maffsvalves.com

CORPORATE & FACTORY :
Gala No. 9, Building No. 3, Patel Industrial Estate, Gokhivare,
Range Office, Vasai East, Palghar - 401208